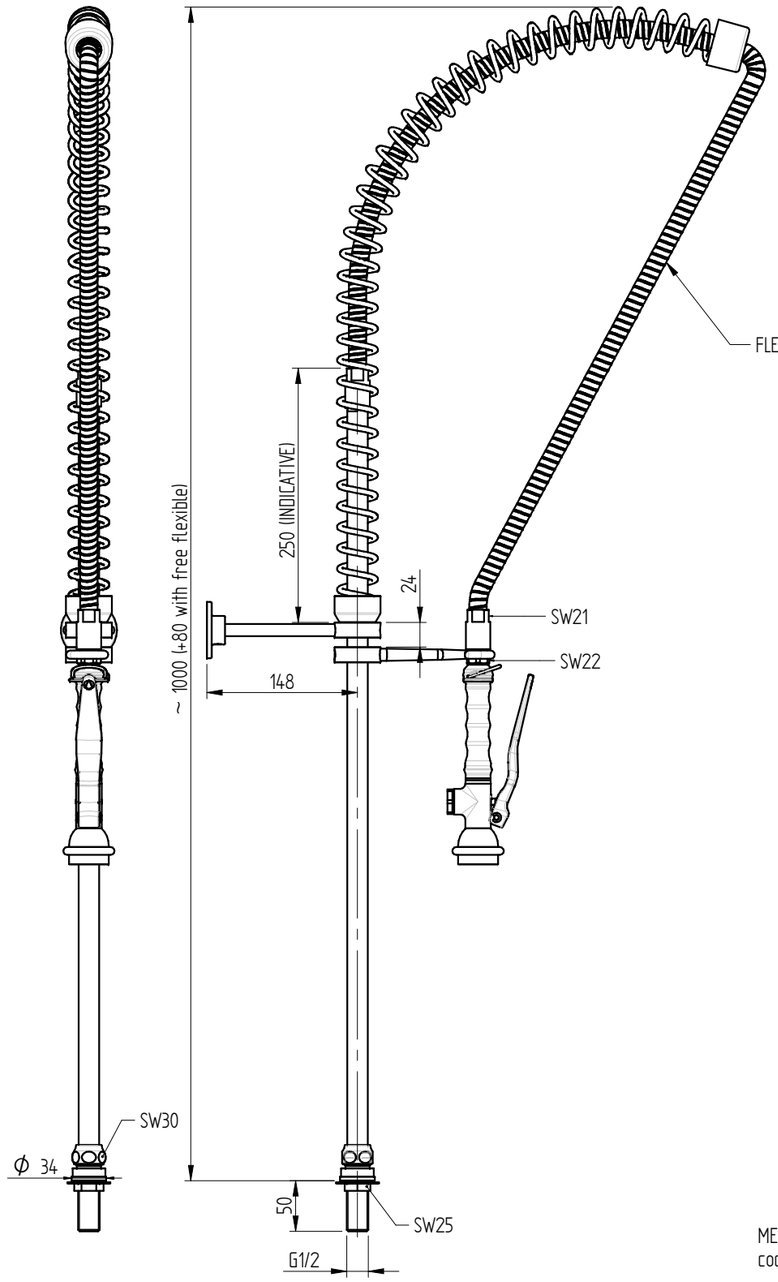

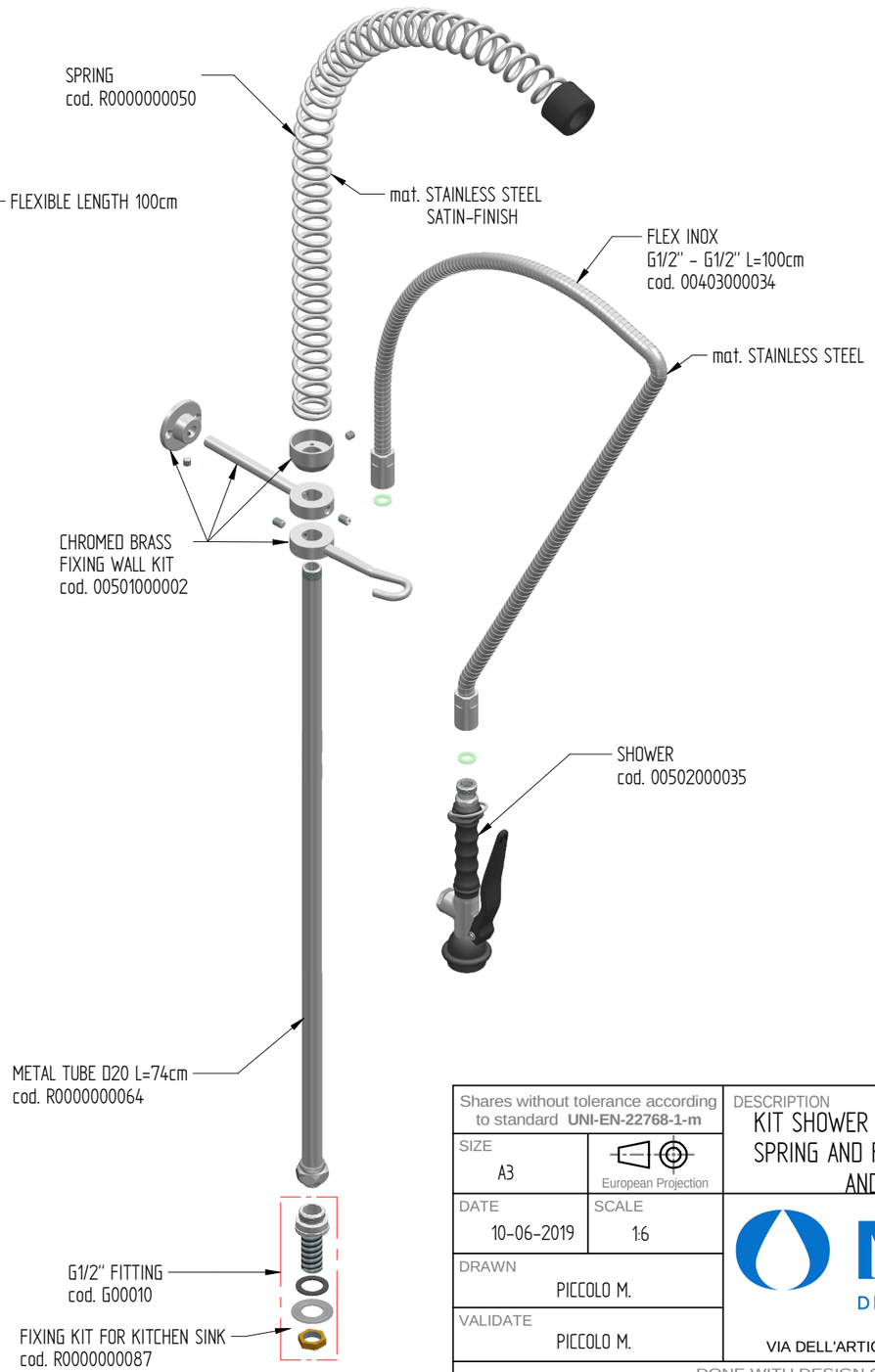

FLOW RATE : 12 L/min at 3,5 BAR only from the shower

sink fixing hole : ø21,5 mm

Shares without tolerance according to standard **UNI-EN-22768-1-m**	DESCRIPTION KIT SHOWER WITH THREADED STEM BASE, STAINLESS STEEL SPRING AND FLEXIBLE, BRASS CHROMED WALL INSTALLATION AND BASIC SHOWER HAND. PLUS VERSION	CODE R0000000089
SIZE A3 — European Projection		WEIGHT 3,67 Kg
DATE 10-06-2019 — SCALE 1:6	MONOLITH DESIGN AND TECHNOLOGICAL RESEARCH FOR WATER	
DRAWN PICCOLO M.		
VALIDATE PICCOLO M.	VIA DELL'ARTIGIANO 8/F-8-G , 31050 MONASTIER di TREVISO (TV) tel: 0422 842157 - fax: 0422 708978	

DONE WITH DESIGN CAD - PROHIBITED THE CHANGES MANUAL

Rev. 01 - 20/04/2022