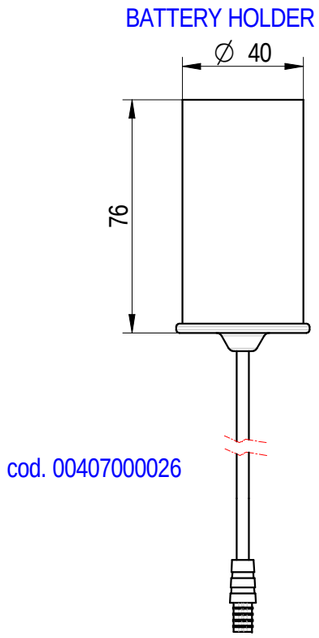

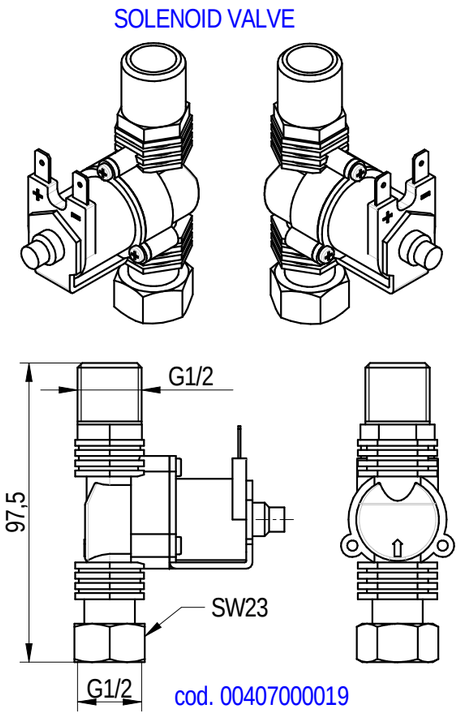

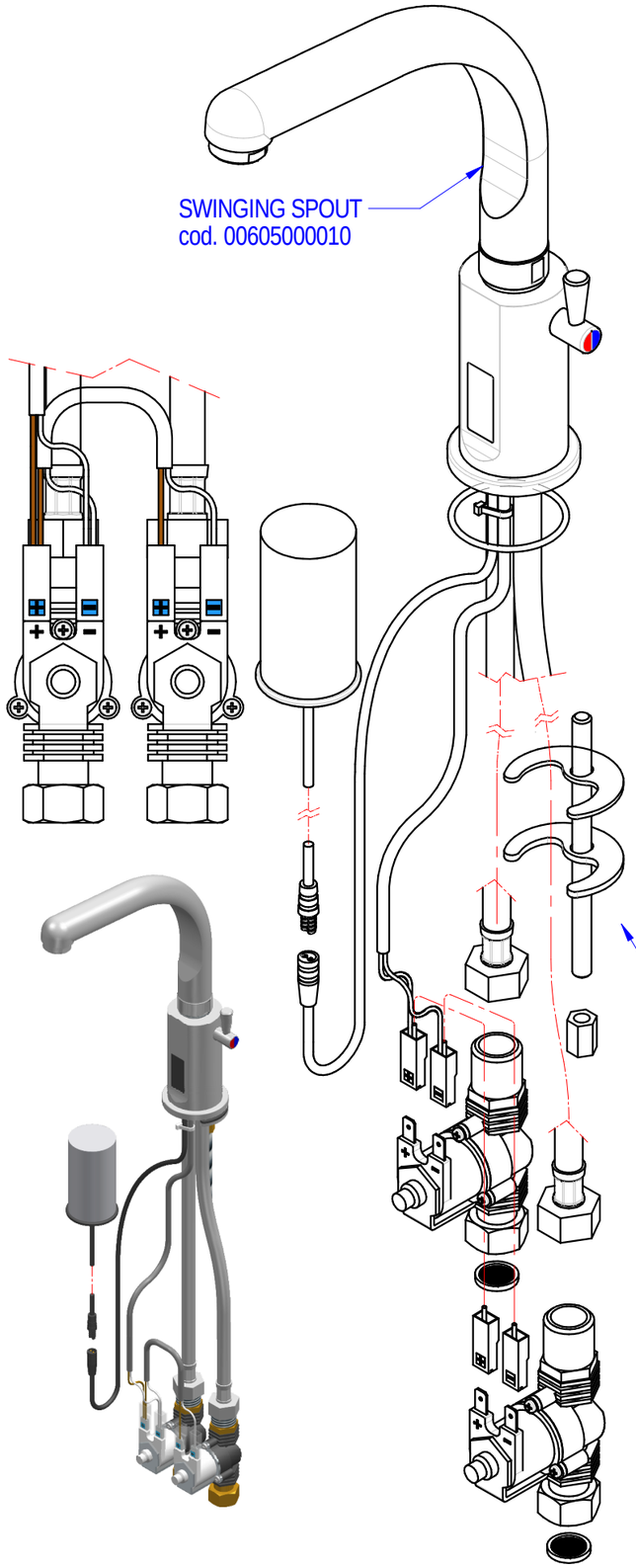

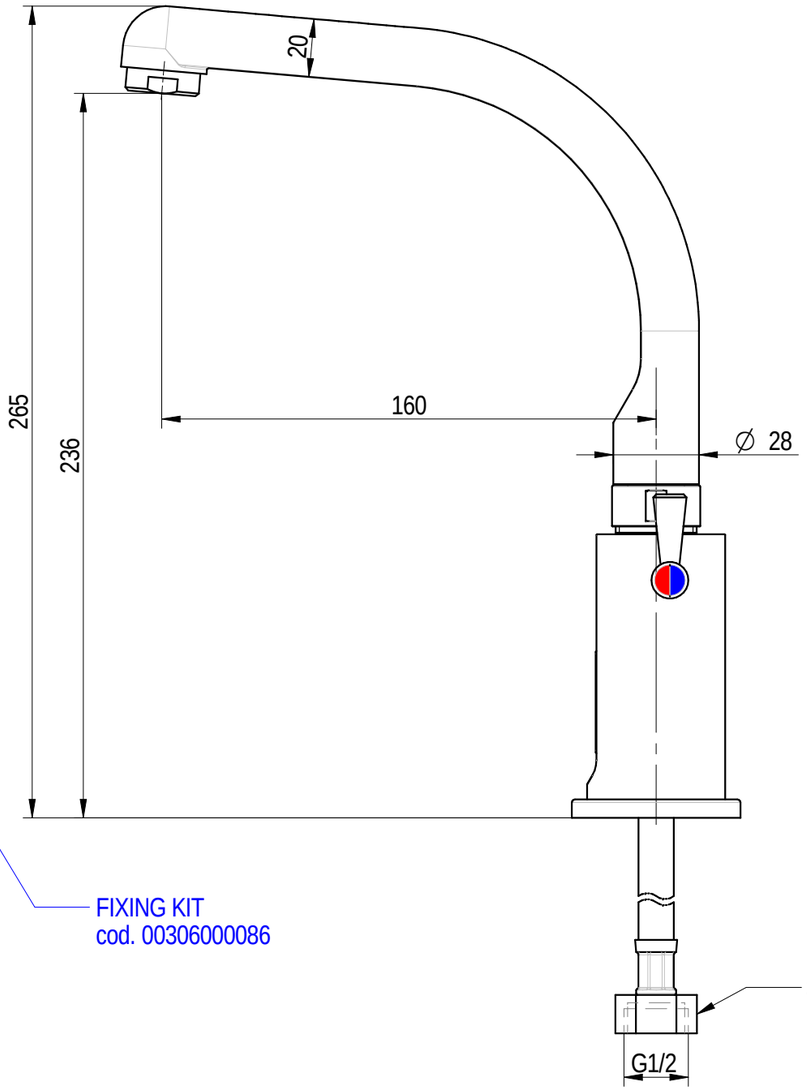

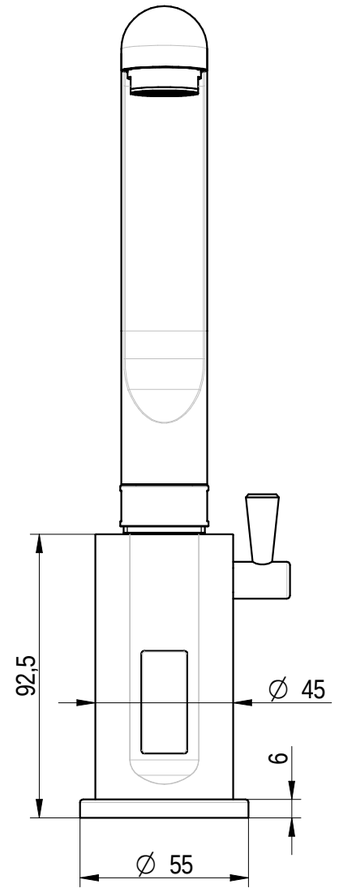

sink fixing hole : ø30 mm

FLOW RATE : 8 L/min

POWER SUPPLY : Alkaline batteries (4x1,5V AA)

Shares without tolerance according to standard **UNI-EN-22768-1-m**	DESCRIPTION PHOTOCELL ELECTRONIC MIXER TAP WITH SWIVEL NOZZLE, ELECTRICITY POWERED	CODE ZEUS003
SIZE A3 — European Projection		WEIGHT 1,56 Kg
DATE 09-03-2020 — SCALE 1:2	MONOLITH DESIGN AND TECHNOLOGICAL RESEARCH FOR WATER	
DRAWN PICCOLO M.		
VALIDATE PICCOLO M.	VIA DELL'ARTIGIANO 8/F-8-G , 31050 MONASTIER di TREVISO (TV) tel: 0422 842157 - fax: 0422 708978	

DONE WITH DESIGN CAD - PROHIBITED THE CHANGES MANUAL

Rev. 00