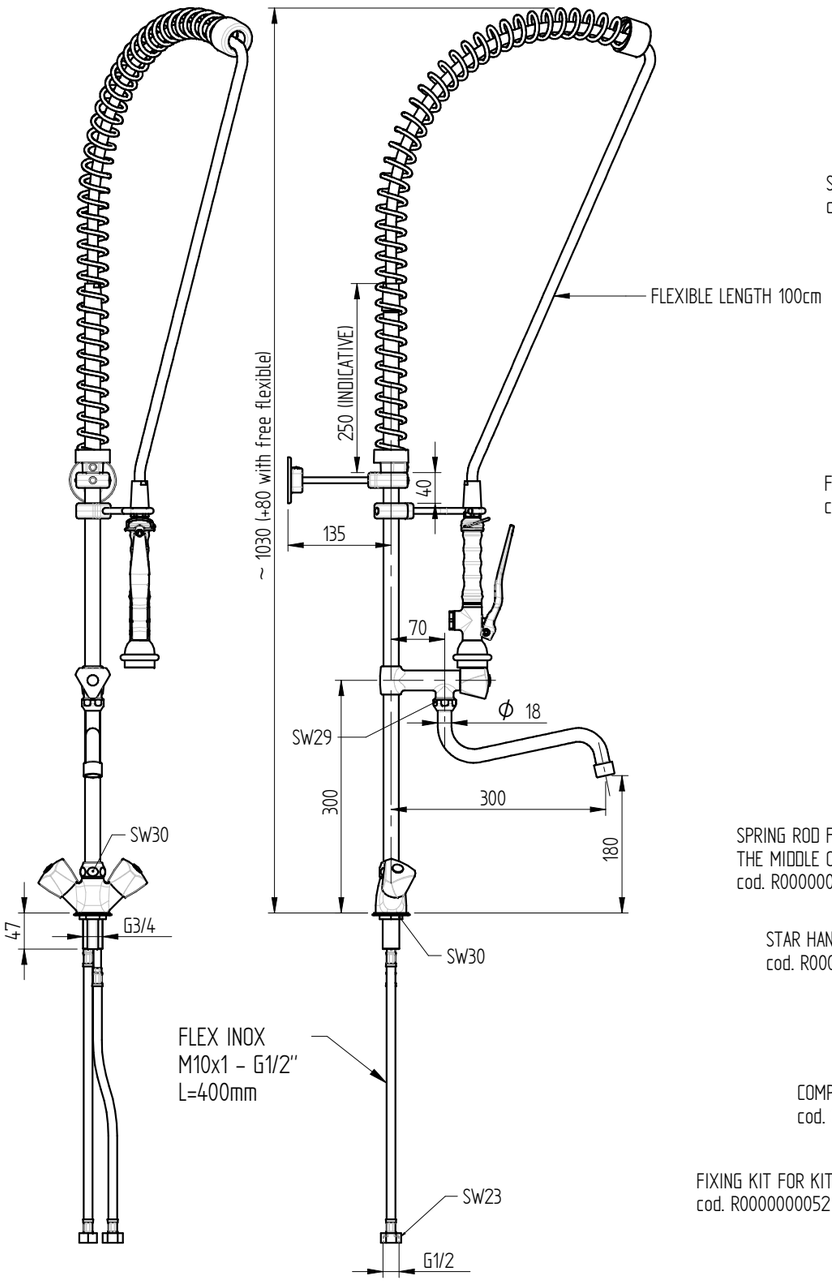

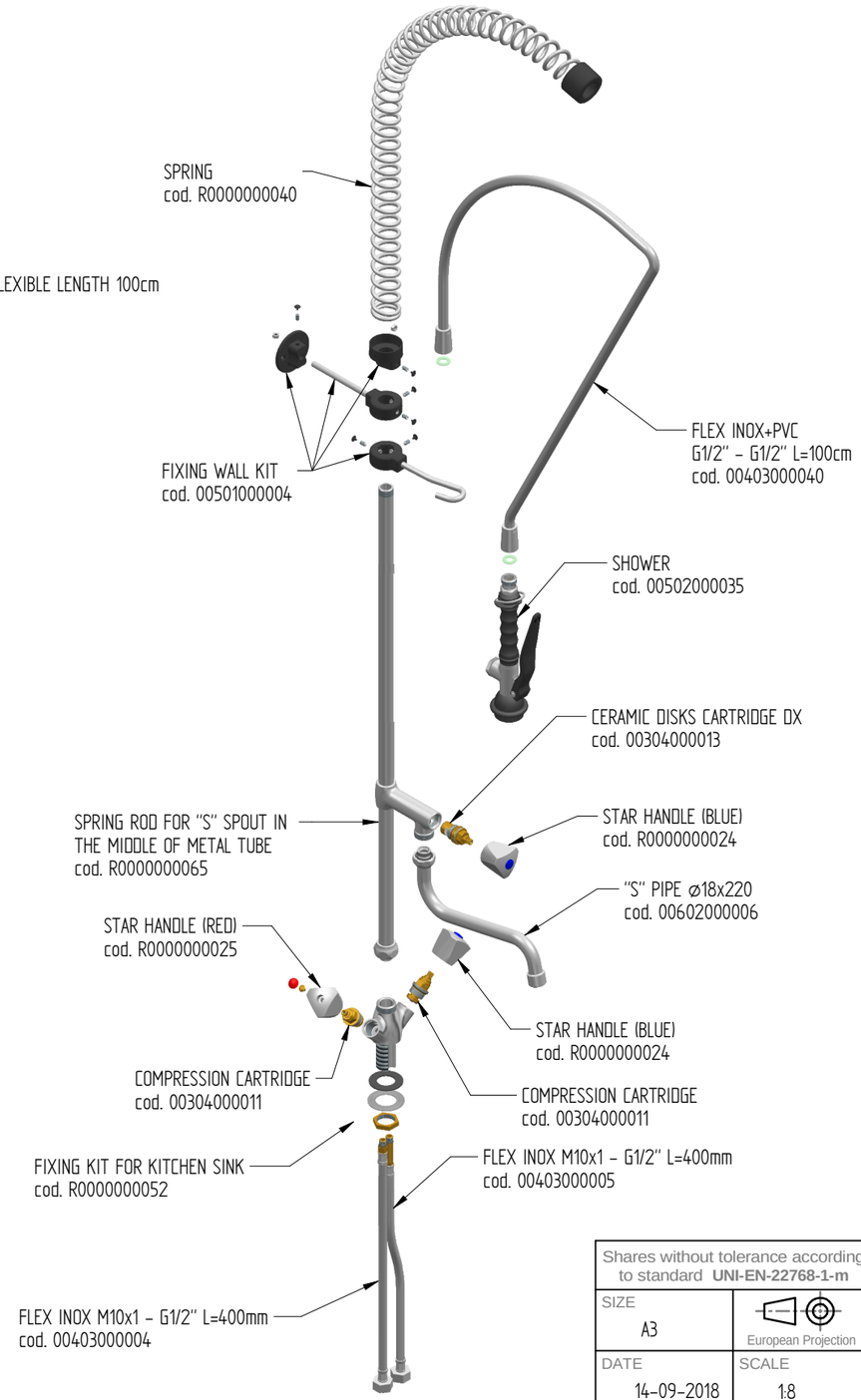

FLOW RATE : 12 L/min at 3,5 BAR only from the shower
14 L/min at 3,5 Bar onlly from the spout
18 L/min at 3,5 BAR when both + spout are open

sink fixing hole : ø27 mm

Shares without tolerance according to standard **UNI-EN-22768-1-m**	DESCRIPTION ONE HOLE PRE-RINSE UNIT WITH SWINGING "S" SPOUT IN THE MIDDLE OF THE TUBE, CHROMED STAR HANDLE AND BASIC SHOWER HAND	CODE R0101020132
SIZE A3 — European Projection		WEIGHT 4,40 Kg
DATE 14-09-2018	SCALE 1:8	MONOLITH DESIGN AND TECHNOLOGICAL RESEARCH FOR WATER
DRAWN PICCOLO M.		
VALIDATE PICCOLO M.		VIA DELL'ARTIGIANO 8/F-8-G , 31050 MONASTIER di TREVISO (TV) tel: 0422 842157 - fax: 0422 708978

DONE WITH DESIGN CAD - PROHIBITED THE CHANGES MANUAL

Rev. 01 - 16/03/2022