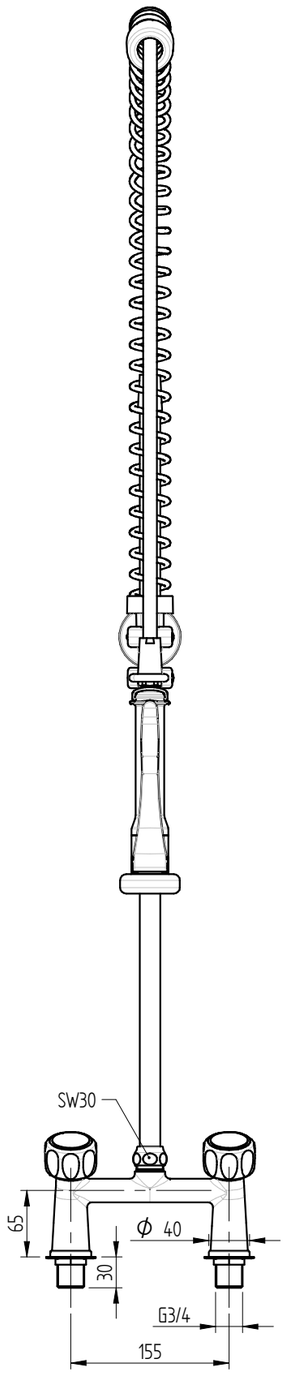

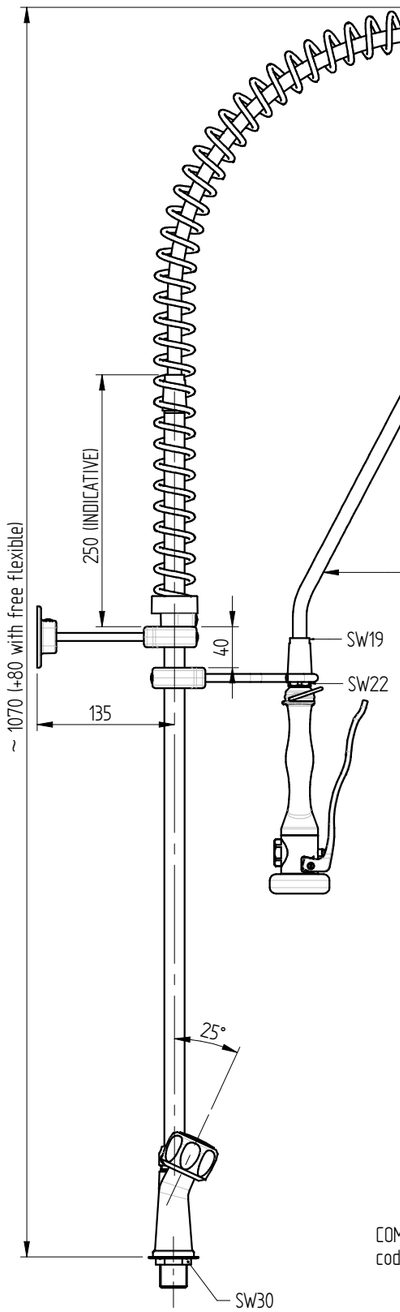

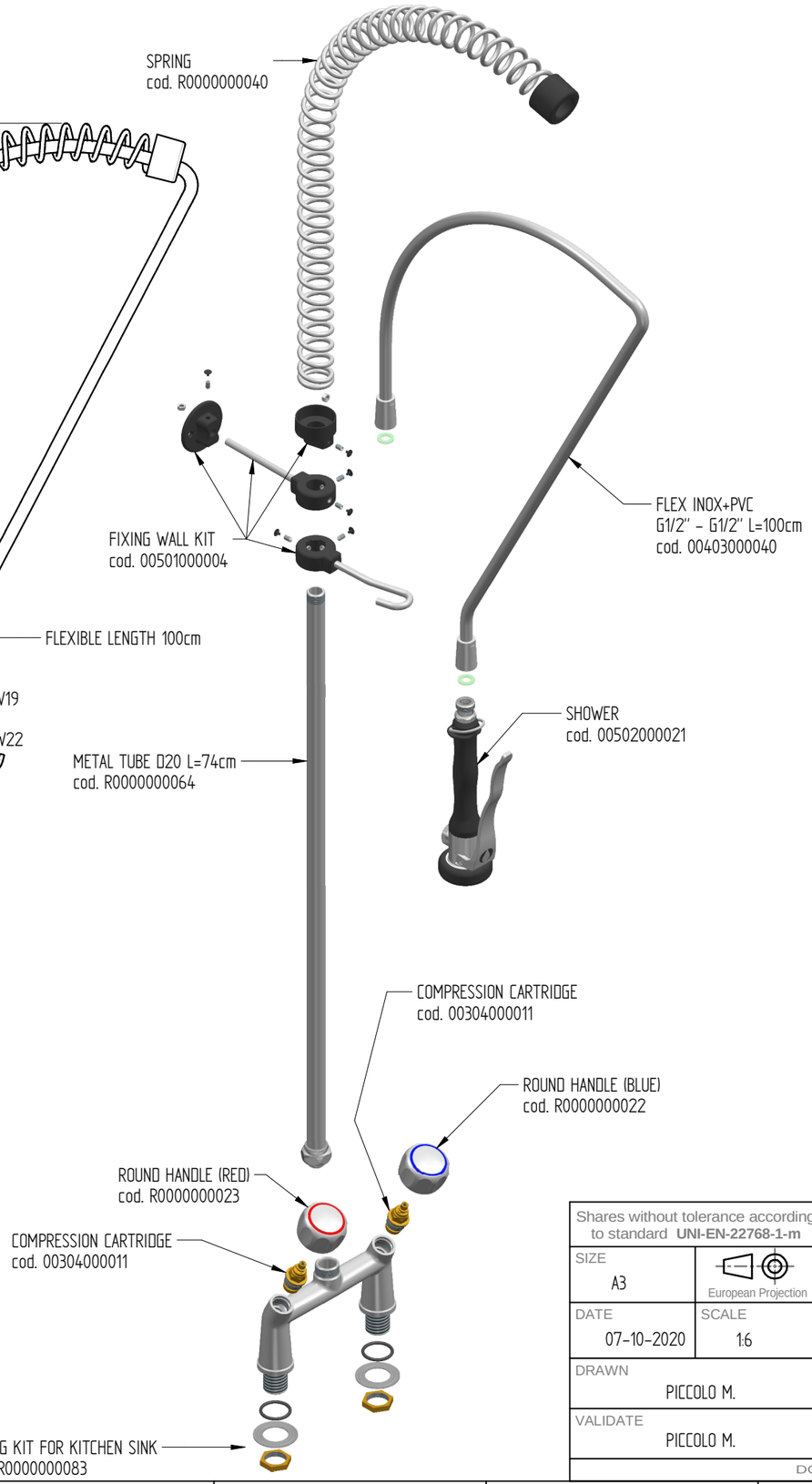

sink fixing holes : ø27 mm

FLOW RATE : 12 L/min at 3,5 BAR only from the shower

Shares without tolerance according to standard **UNI-EN-22768-1-m**	DESCRIPTION TWO HOLES PRE-RINSE UNIT WITH ROUND HANDLE AND PREMIUM SHOWER HAND. 155mm FIXED WHEELBASE	CODE P0102020127
SIZE A3 — European Projection		WEIGHT 4,19 Kg
DATE 07-10-2020 — SCALE 1:6	MONOLITH DESIGN AND TECHNOLOGICAL RESEARCH FOR WATER	
DRAWN PICCOLO M.		
VALIDATE PICCOLO M.	VIA DELL'ARTIGIANO 8/F-8-G , 31050 MONASTIER di TREVISO (TV) tel: 0422 842157 - fax: 0422 708978	

DONE WITH DESIGN CAD - PROHIBITED THE CHANGES MANUAL

Rev. 00