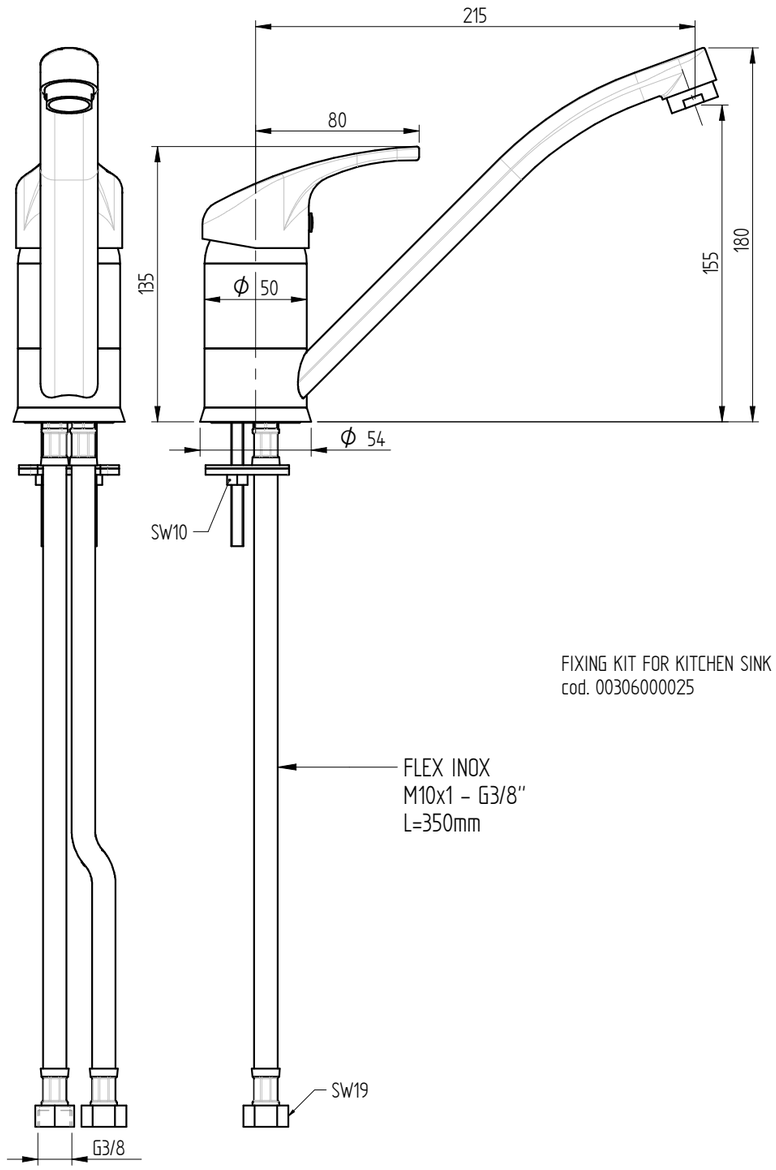

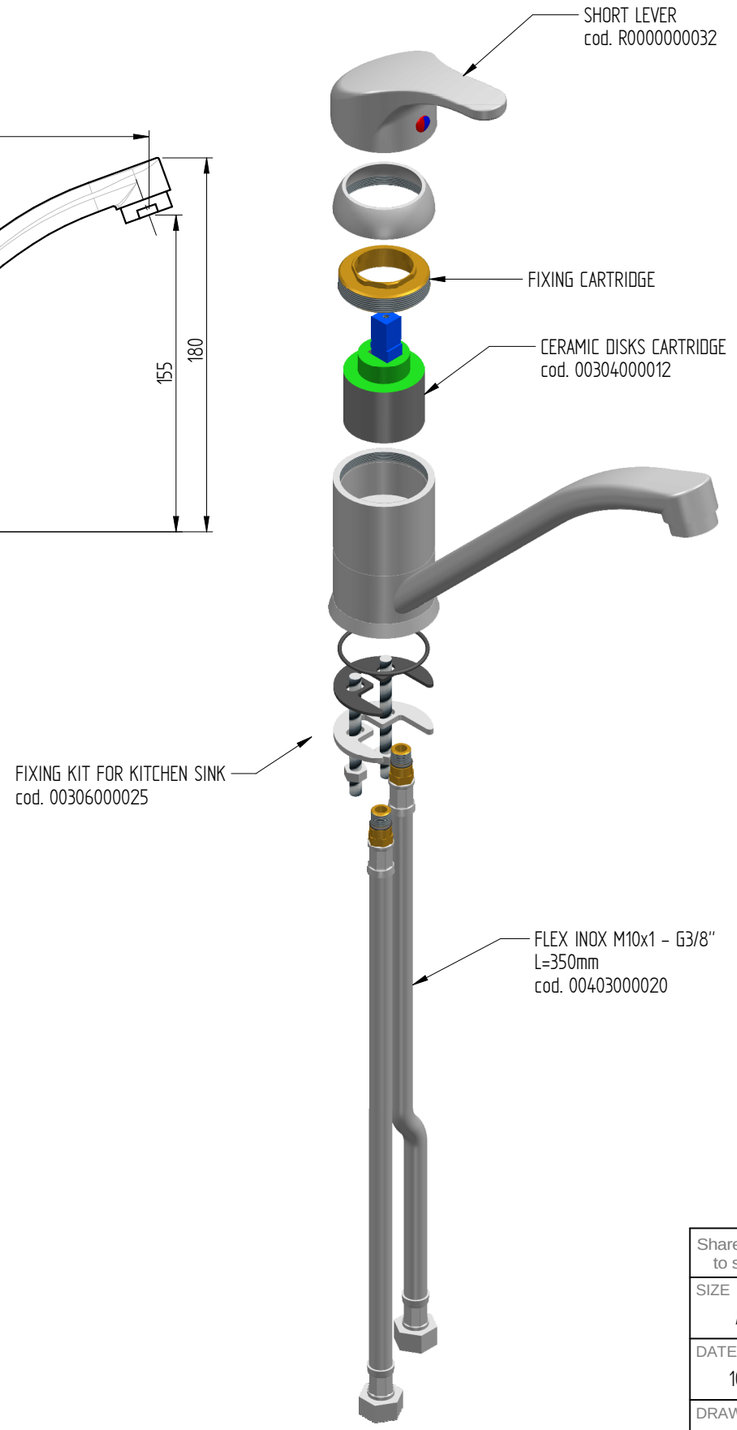

FLOW RATE : 14 L/min at 3,5 BAR

sink fixing hole : ø32mm (maximum)

Shares without tolerance according to standard **UNI-EN-22768-1-m**		DESCRIPTION ONE HOLE SINK MIXER TAP WITH SHORT LEVER	CODE R0201020201
SIZE A3	European Projection		WEIGHT 1,19 Kg
DATE 10-08-2018	SCALE 1:3	MONOLITH DESIGN AND TECHNOLOGICAL RESEARCH FOR WATER	
DRAWN PICCOLO M.			
VALIDATE PICCOLO M.		VIA DELL'ARTIGIANO 8/F-8-G , 31050 MONASTIER di TREVISO (TV) tel: 0422 842157 - fax: 0422 708978	

DONE WITH DESIGN CAD - PROHIBITED THE CHANGES MANUAL

Rev. 00