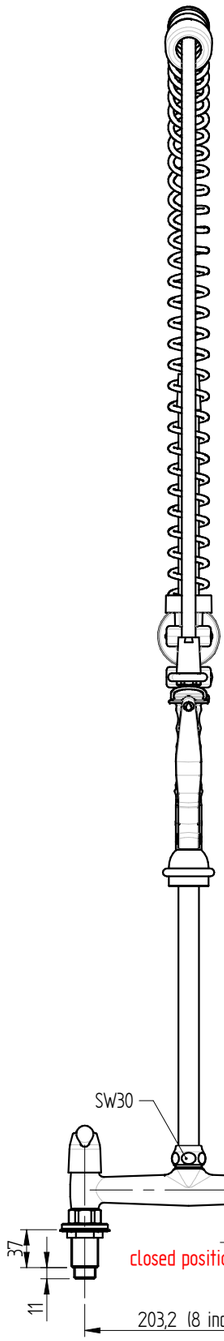

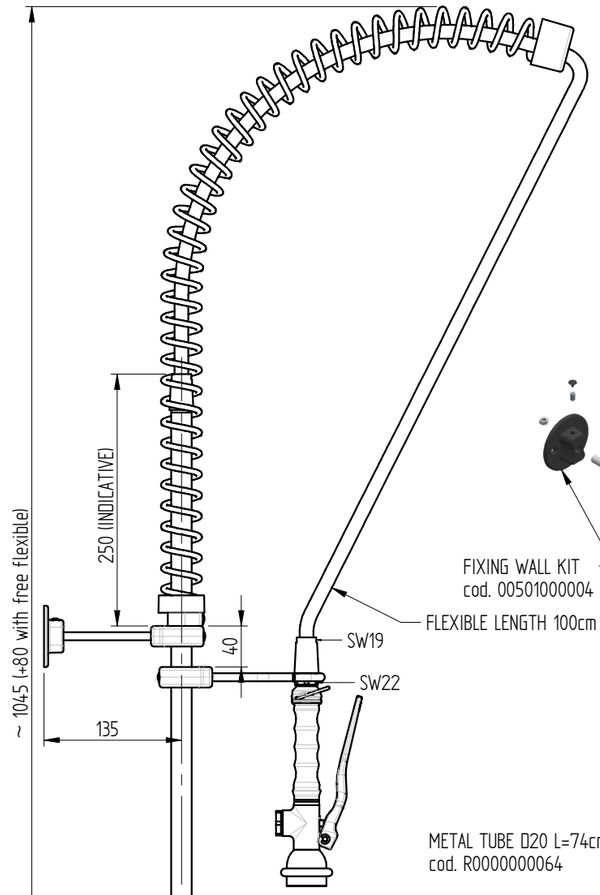

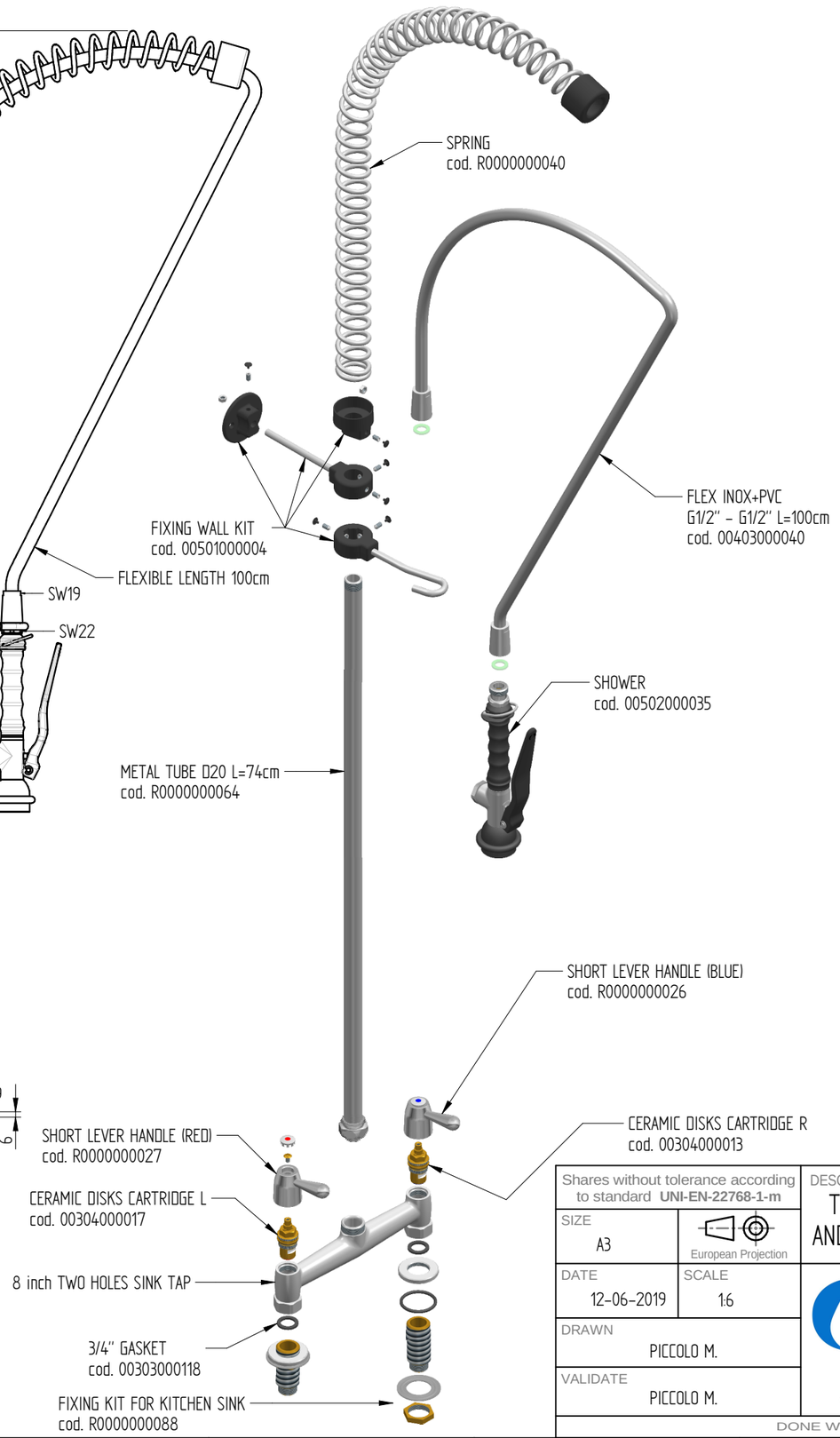

FLOW RATE : 12 L/min at 3,5 BAR only from the shower

sink fixing holes : ø27 mm

Shares without tolerance according to standard **UNI-EN-22768-1-m**		DESCRIPTION TWO HOLES PRE-RINSE UNIT WITH LEVER HANDLE AND BASIC SHOWER HAND. 203,2mm FIXED WHEELBASE	CODE R0102020159
SIZE A3	European Projection		WEIGHT 3,95 Kg
DATE 12-06-2019	SCALE 1:6	MONOLITH DESIGN AND TECHNOLOGICAL RESEARCH FOR WATER	
DRAWN PICCOLO M.			
VALIDATE PICCOLO M.		VIA DELL'ARTIGIANO 8/F-8-G , 31050 MONASTIER di TREVISO (TV) tel: 0422 842157 - fax: 0422 708978	

DONE WITH DESIGN CAD - PROHIBITED THE CHANGES MANUAL

Rev. 01 - 08/04/2022