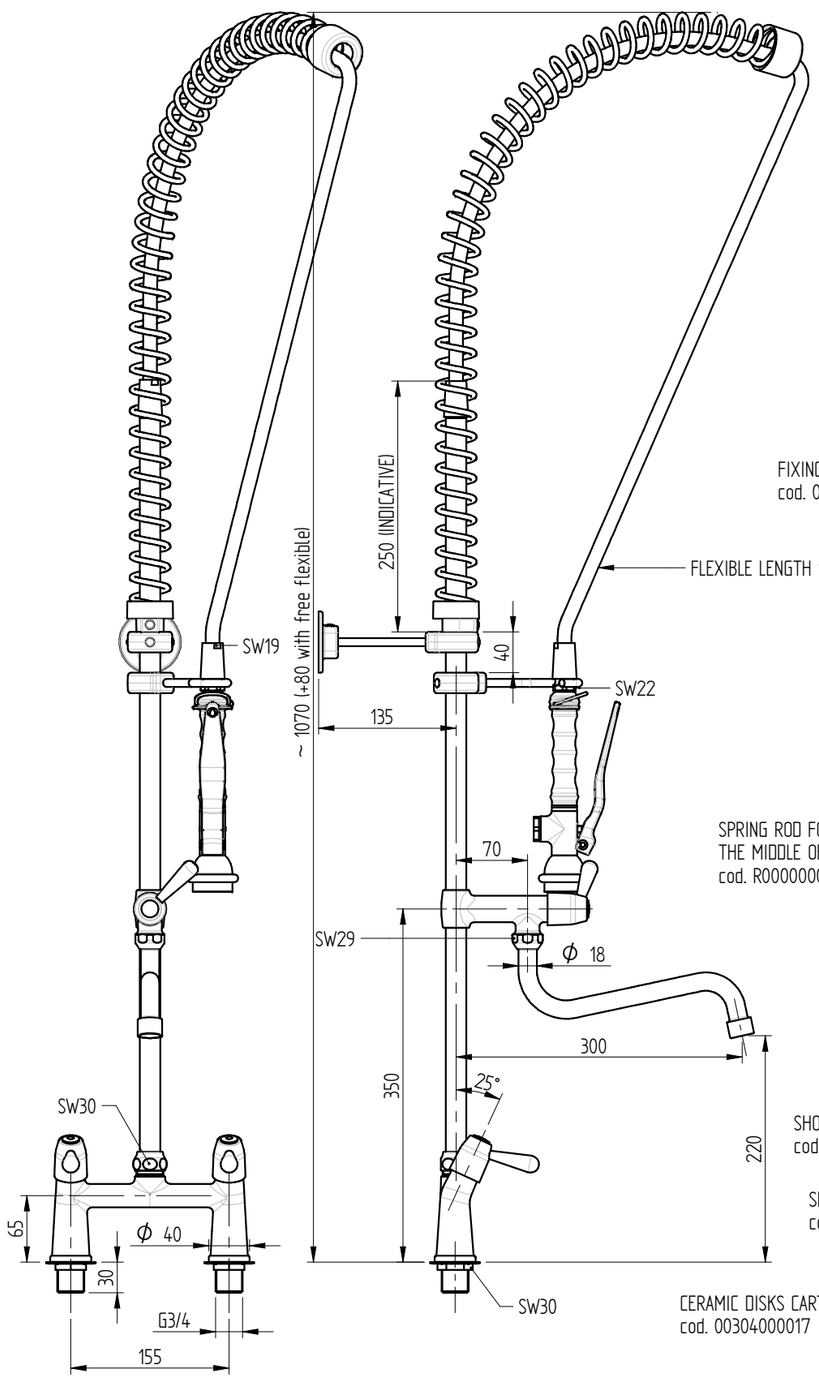

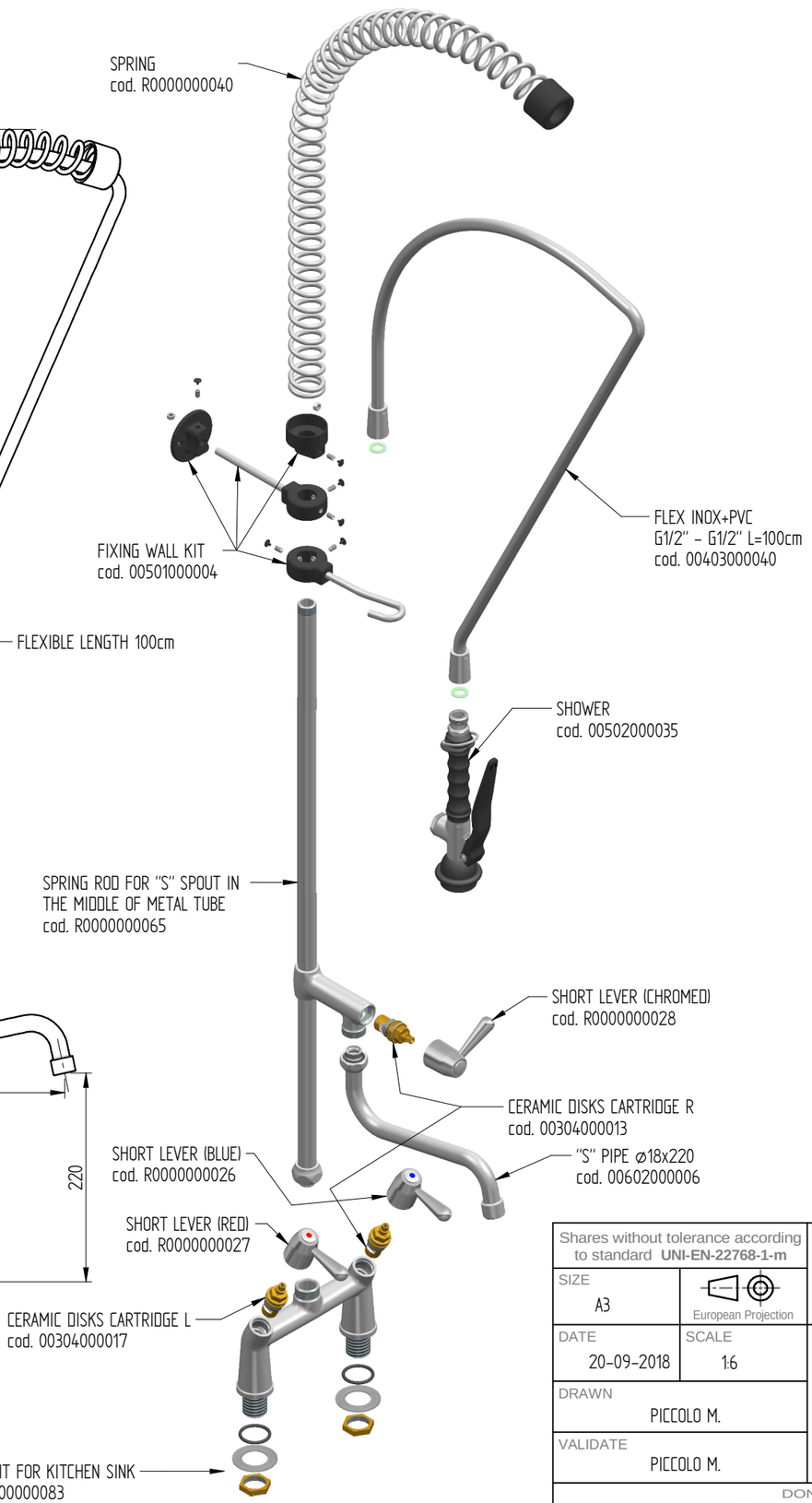

FLOW RATE : 12 L/min at 3,5 BAR only from the shower
14 L/min at 3,5 Bar onlly from the spout
18 L/min at 3,5 BAR when both + spout are open

sink fixing holes : ø27 mm

Shares without tolerance according to standard **UNI-EN-22768-1-m**		DESCRIPTION TWO HOLES PRE-RINSE UNIT WITH SWINGING "S" SPOUT IN THE MIDDLE OF METAL TUBE, LEVER HANDLE AND BASIC SHOWER HAND. 155mm FIXED WHEELBASE	CODE R0102020130
SIZE A3	European Projection		WEIGHT 4,47 Kg
DATE 20-09-2018	SCALE 1:6	MONOLITH DESIGN AND TECHNOLOGICAL RESEARCH FOR WATER	
DRAWN PICCOLO M.			
VALIDATE PICCOLO M.		VIA DELL'ARTIGIANO 8/F-8-G , 31050 MONASTIER di TREVISO (TV) tel: 0422 842157 - fax: 0422 708978	

DONE WITH DESIGN CAD - PROHIBITED THE CHANGES MANUAL

Rev. 01 - 06/04/2022