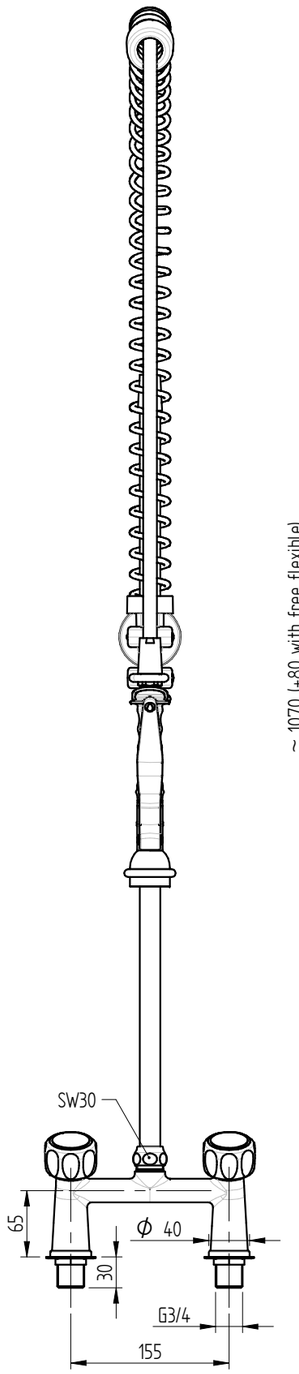

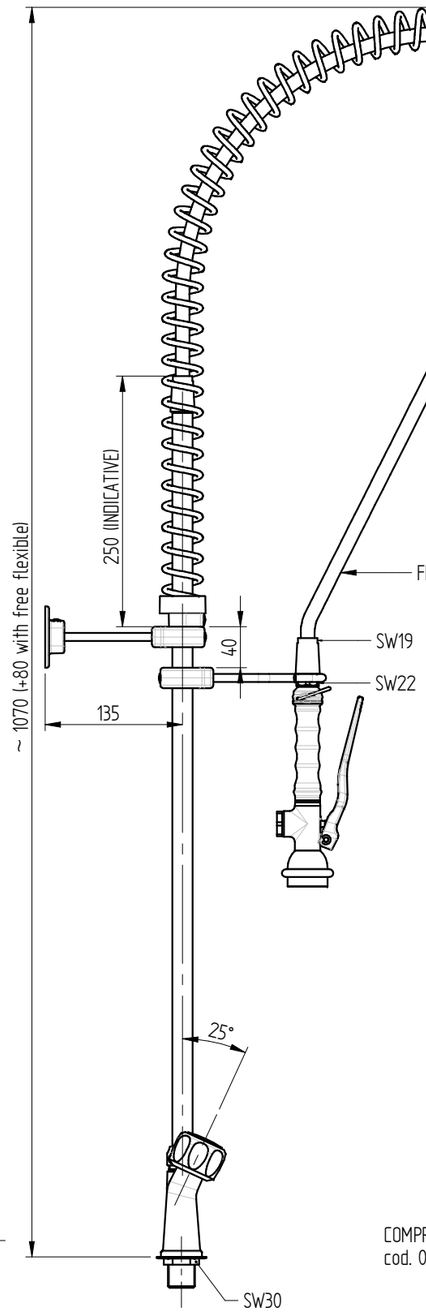

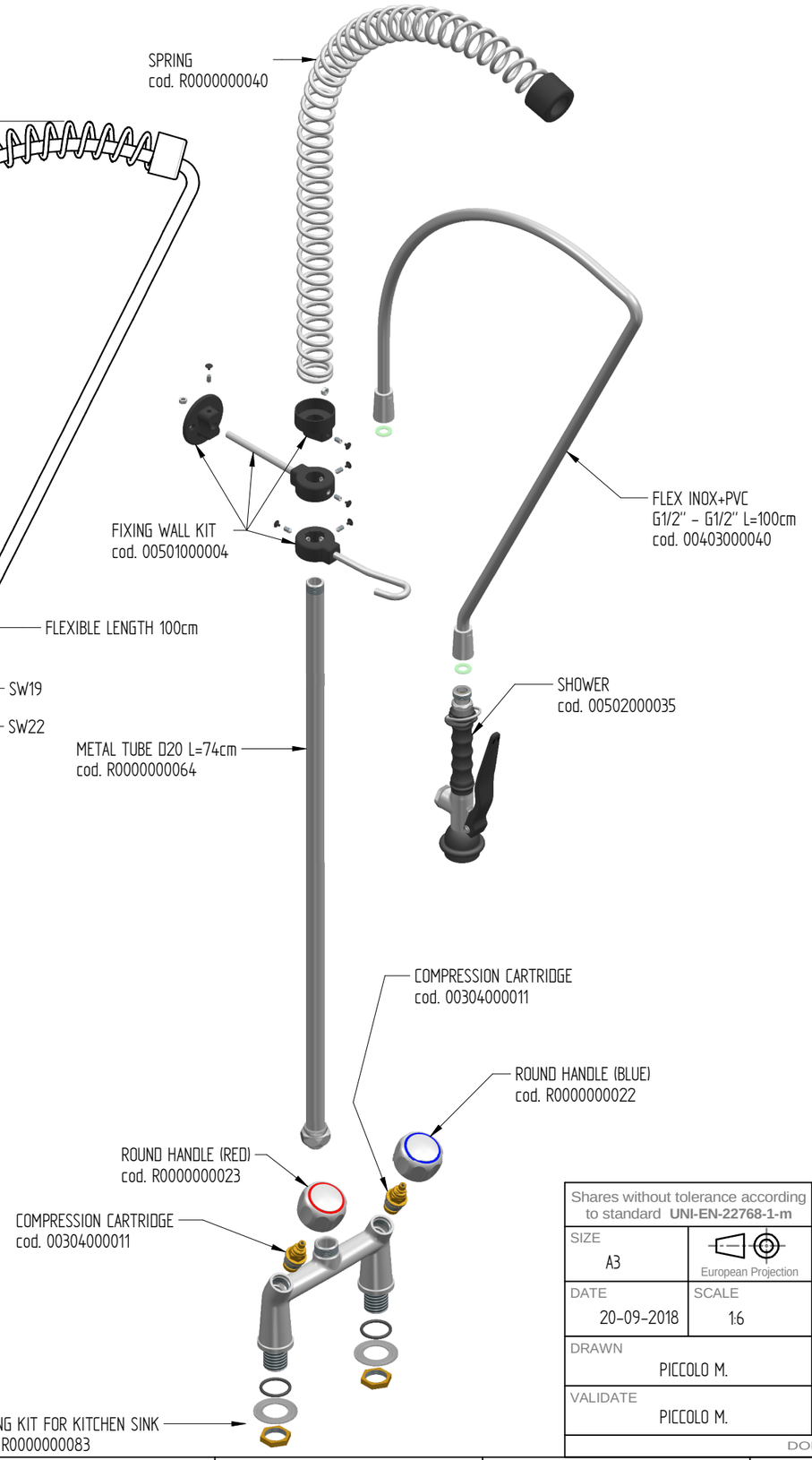

sink fixing holes : ø27 mm

FLOW RATE : 12 L/min at 3,5 BAR only from the shower

Shares without tolerance according to standard **UNI-EN-22768-1-m**	DESCRIPTION TWO HOLES PRE-RINSE UNIT WITH ROUND HANDLE AND BASIC SHOWER HAND. 155mm FIXED WHEELBASE	CODE R0102020127
SIZE A3 — European Projection		WEIGHT 3,94 Kg
DATE 20-09-2018	SCALE 1:6	
DRAWN PICCOLO M.		
VALIDATE PICCOLO M.		

MONOLITH
DESIGN AND TECHNOLOGICAL RESEARCH FOR WATER

VIA DELL'ARTIGIANO 8/F-8-G , 31050 MONASTIER di TREVISO (TV) tel: 0422 842157 - fax: 0422 708978

DONE WITH DESIGN CAD - PROHIBITED THE CHANGES MANUAL

Rev. 01 - 06/04/2022