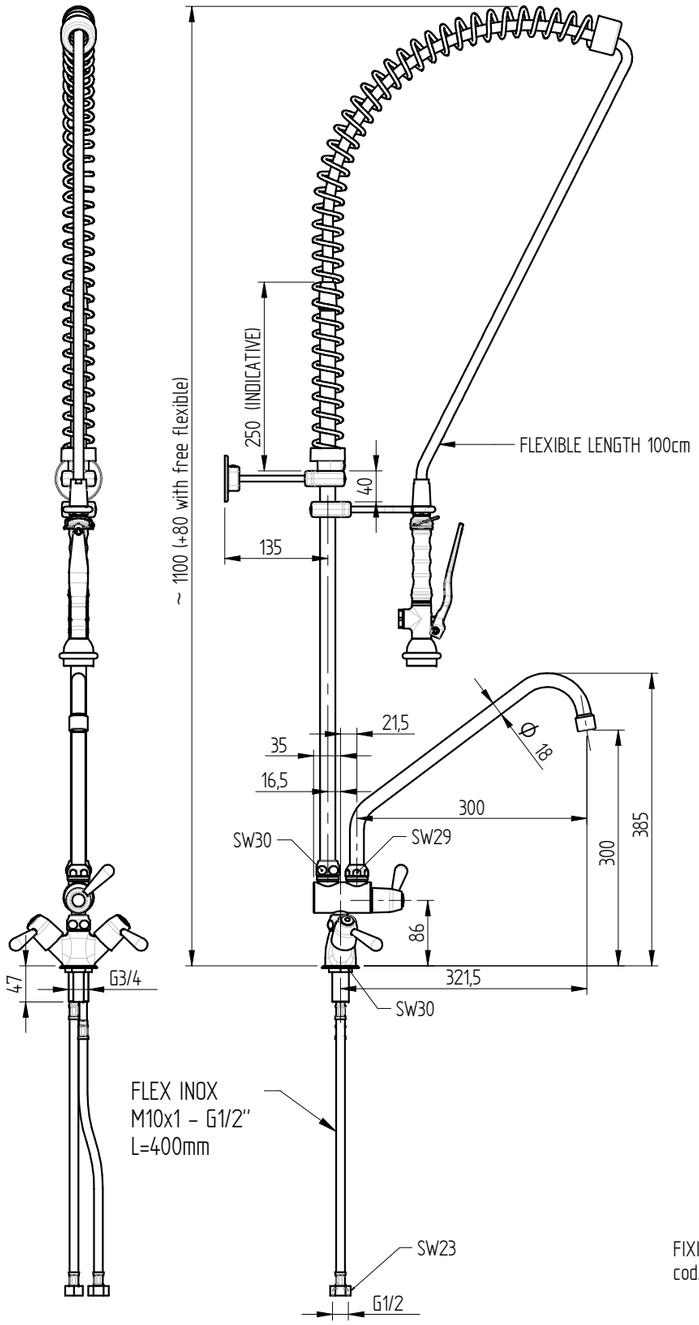


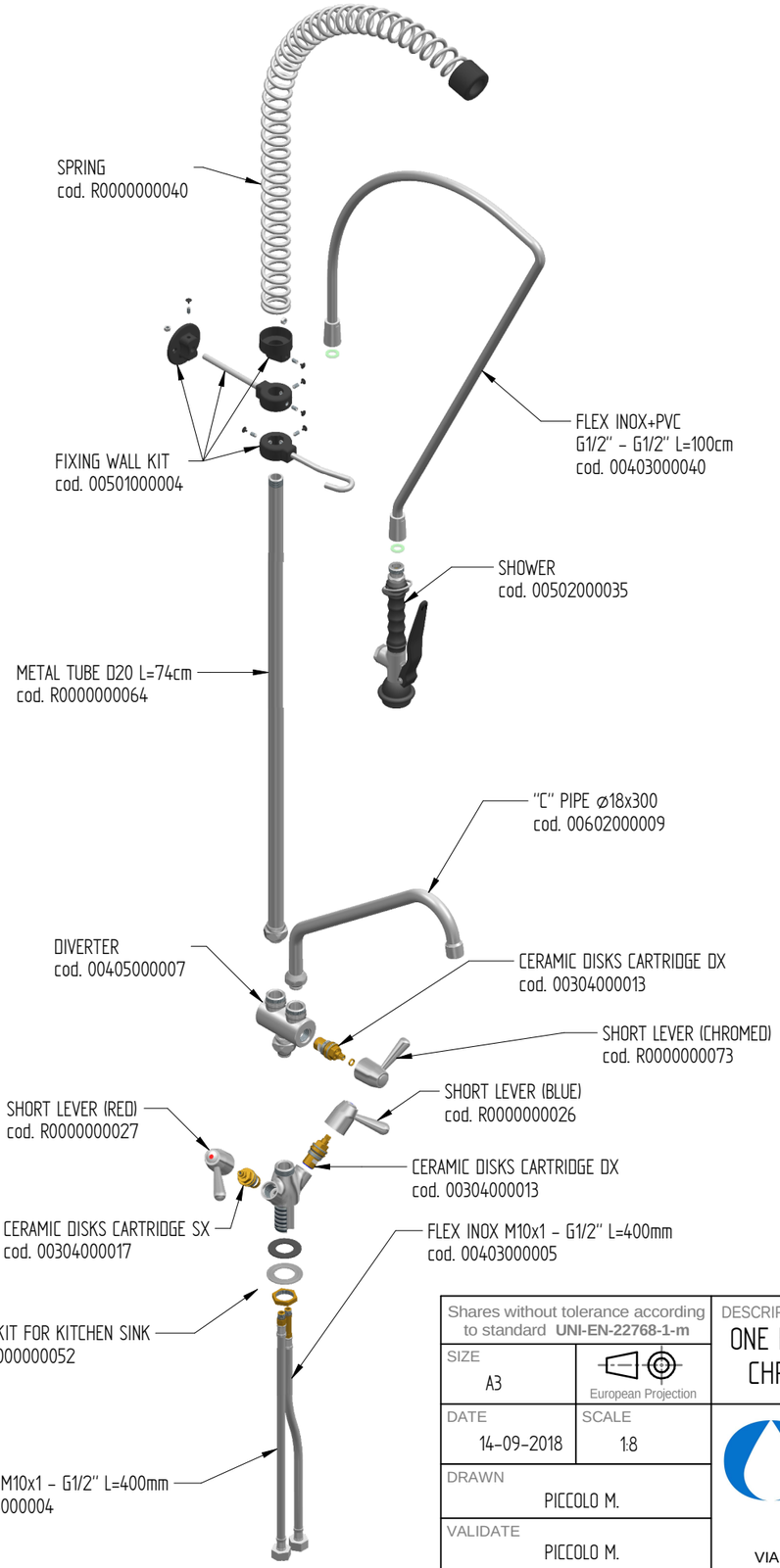

FLOW RATE : 12 L/min at 3,5 BAR only from the shower
14 L/min at 3,5 Bar onlly from the spout
18 L/min at 3,5 BAR when both + spout are open

sink fixing hole : ø27 mm

| | | | |
|---|---|---|---|
| Shares without tolerance according to standard **UNI-EN-22768-1-m** | | DESCRIPTION<br>ONE HOLE PRE-RINSE UNIT WITH "C" SPOUT Φ18x300, CHROMED LEVER HANDLE AND BASIC SHOWER HAND | CODE<br>R0101020138 |
| SIZE<br>A3 | European Projection | | WEIGHT<br>4,89 Kg |
| DATE<br>14-09-2018 | SCALE<br>1:8 | MONOLITH<br>DESIGN AND TECHNOLOGICAL RESEARCH FOR WATER | |
| DRAWN<br>PICCOLO M. | | | |
| VALIDATE<br>PICCOLO M. | | VIA DELL'ARTIGIANO 8/F-8-G , 31050 MONASTIER di TREVISO (TV) tel: 0422 842157 - fax: 0422 708978 | |

DONE WITH DESIGN CAD - PROHIBITED THE CHANGES MANUAL

Rev. 01 - 25/02/2022