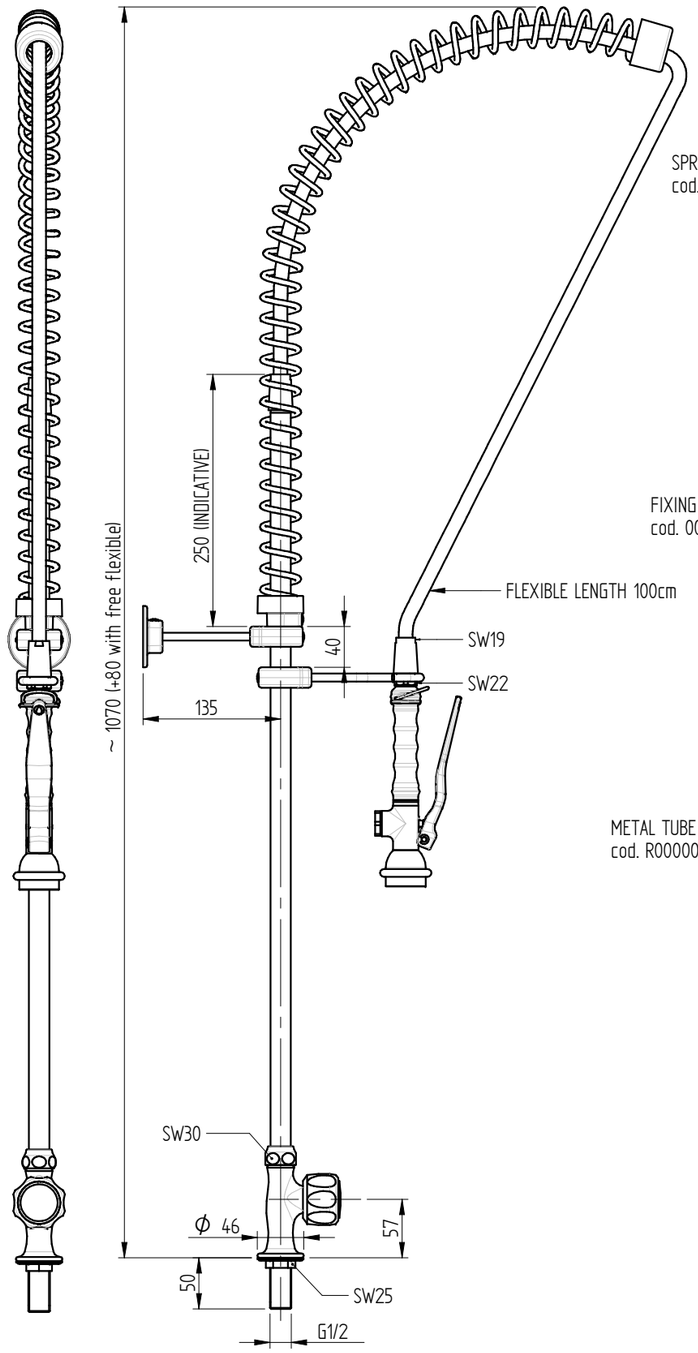

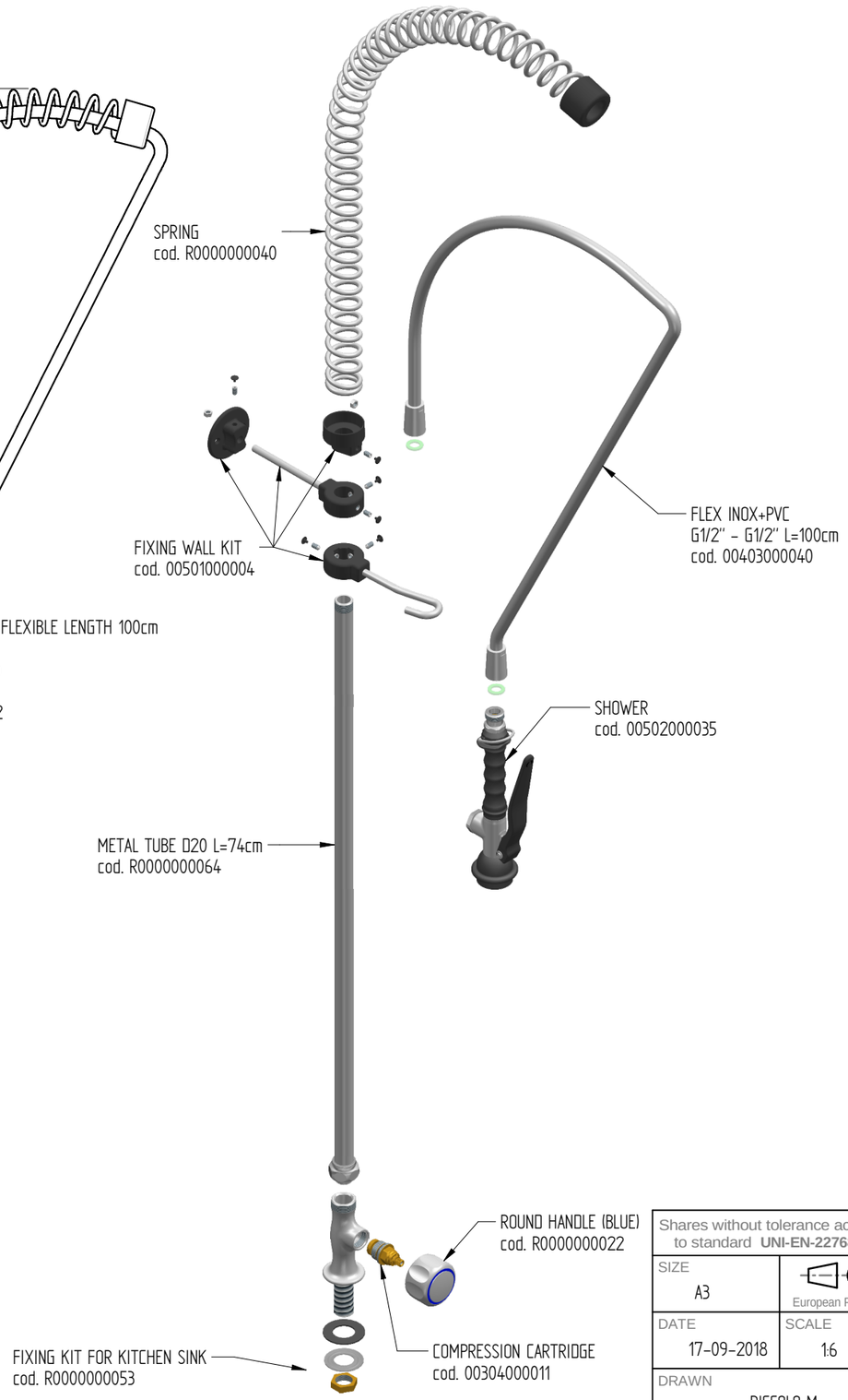

FLOW RATE : 12 L/min at 3,5 BAR only from the shower

sink fixing hole : ø25 mm

Shares without tolerance according to standard **UNI-EN-22768-1-m**	DESCRIPTION ONE HOLE PRE-RINSE COLD WATER UNIT WITH ROUND HANDLE AND BASIC SHOWER HAND	CODE R0101020117
SIZE A3 — European Projection		WEIGHT 3,27 Kg
DATE 17-09-2018	SCALE 1:6	
DRAWN PICCOLO M.		
VALIDATE PICCOLO M.		

MONOLITH
DESIGN AND TECHNOLOGICAL RESEARCH FOR WATER

VIA DELL'ARTIGIANO 8/F-8-G , 31050 MONASTIER di TREVISO (TV) tel: 0422 842157 - fax: 0422 708978

DONE WITH DESIGN CAD - PROHIBITED THE CHANGES MANUAL