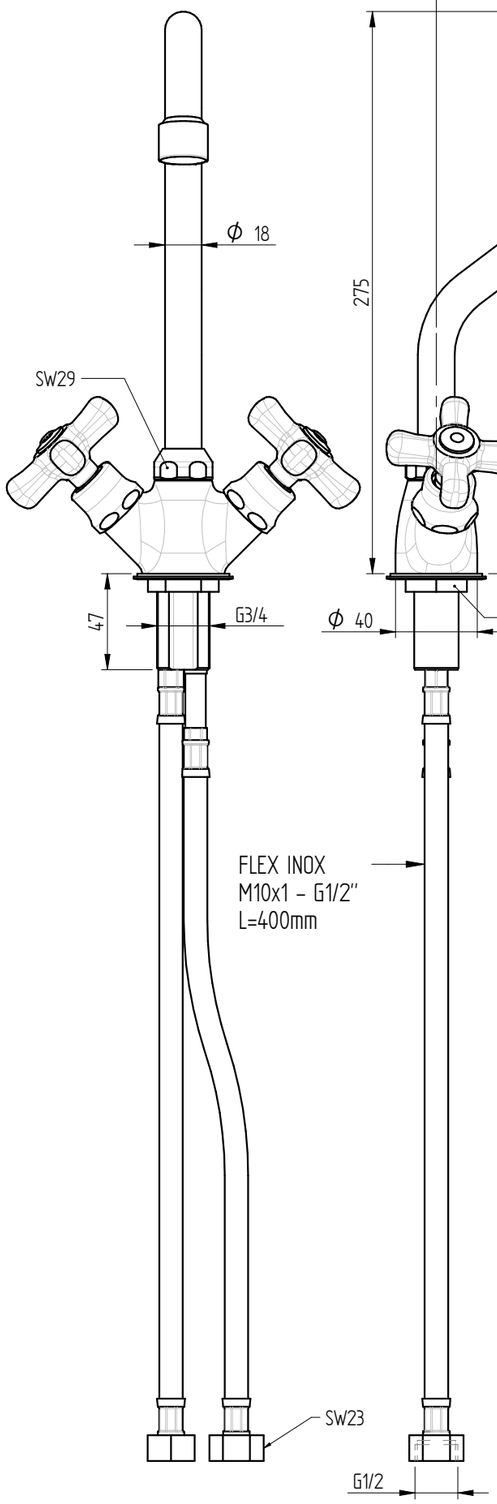

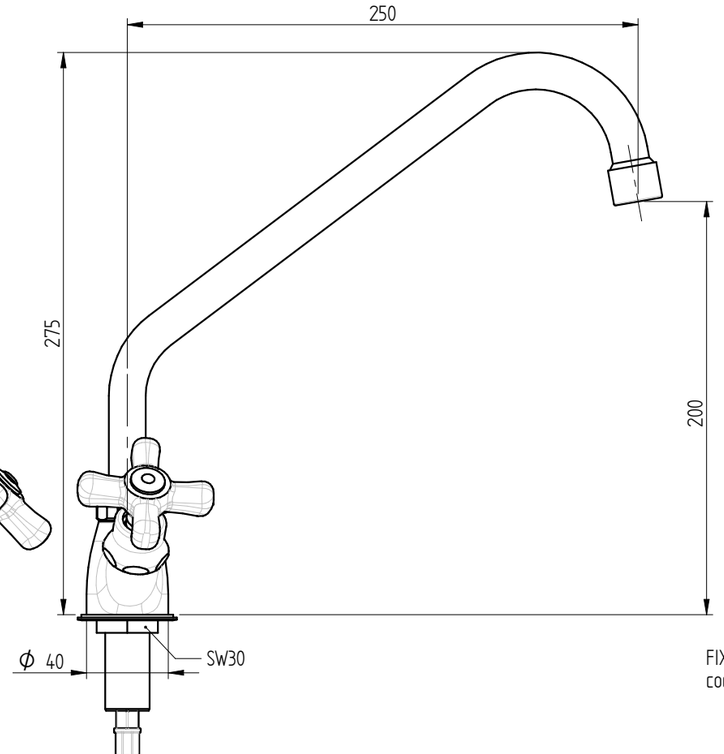

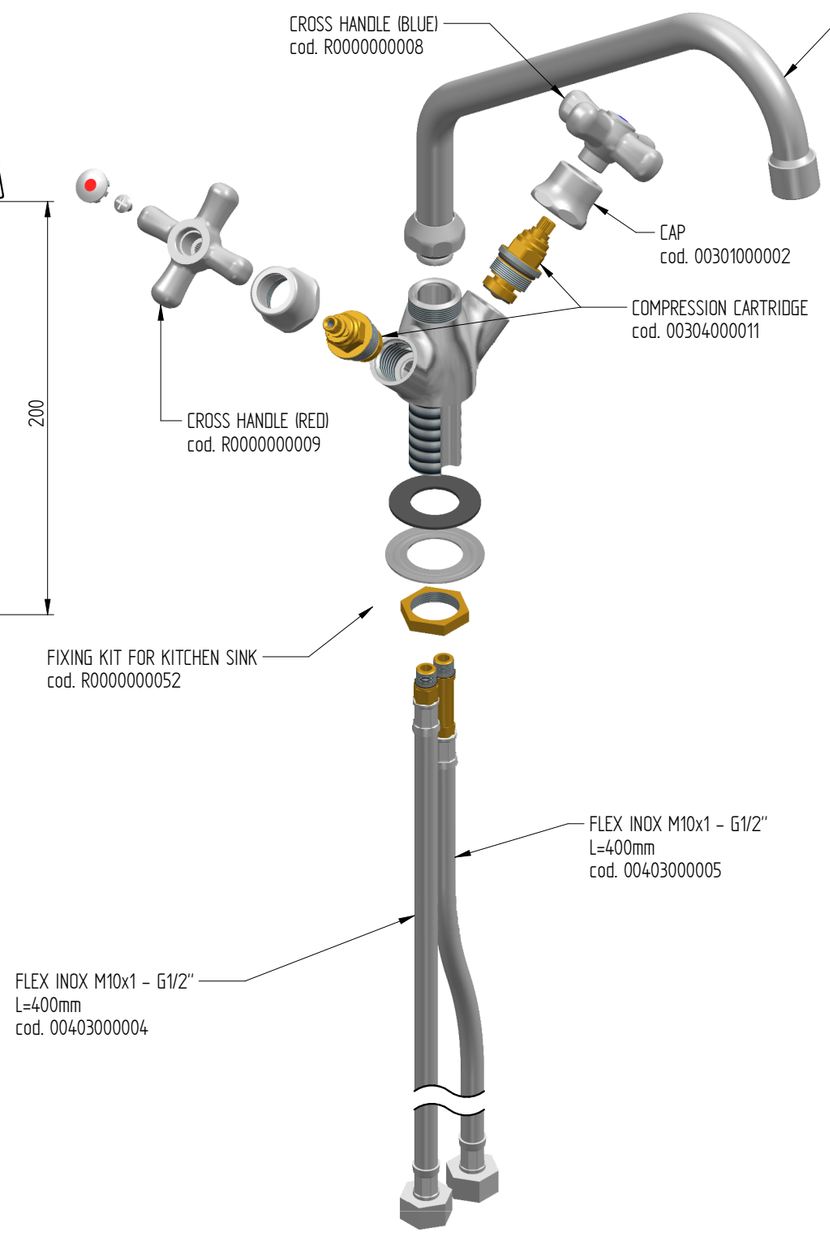

FLOW RATE : 16 L/min at 3,5 BAR

sink fixing hole : ϕ27 mm

Shares without tolerance according to standard **UNI-EN-22768-1-m**	DESCRIPTION ONE HOLE SINK TAP WITH CROSS HANDLES, "C" PIPE ϕ 18x250	CODE R0101020102
SIZE A3 — European Projection		WEIGHT 1,41 Kg
DATE 10-08-2018 — SCALE 1:3	MONOLITH DESIGN AND TECHNOLOGICAL RESEARCH FOR WATER	
DRAWN PICCOLO M.		
VALIDATE PICCOLO M.	VIA DELL'ARTIGIANO 8/F-8-G , 31050 MONASTIER di TREVISO (TV) tel: 0422 842157 - fax: 0422 708978	

DONE WITH DESIGN CAD - PROHIBITED THE CHANGES MANUAL

Rev. 00