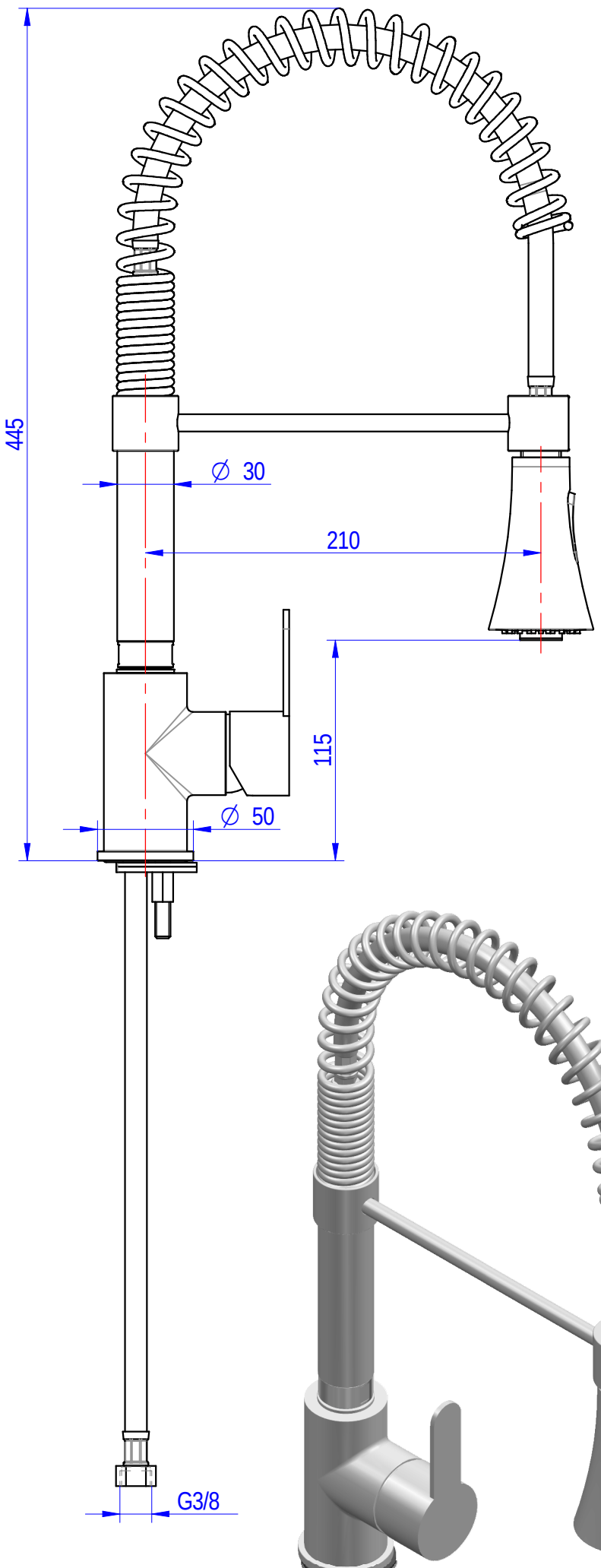

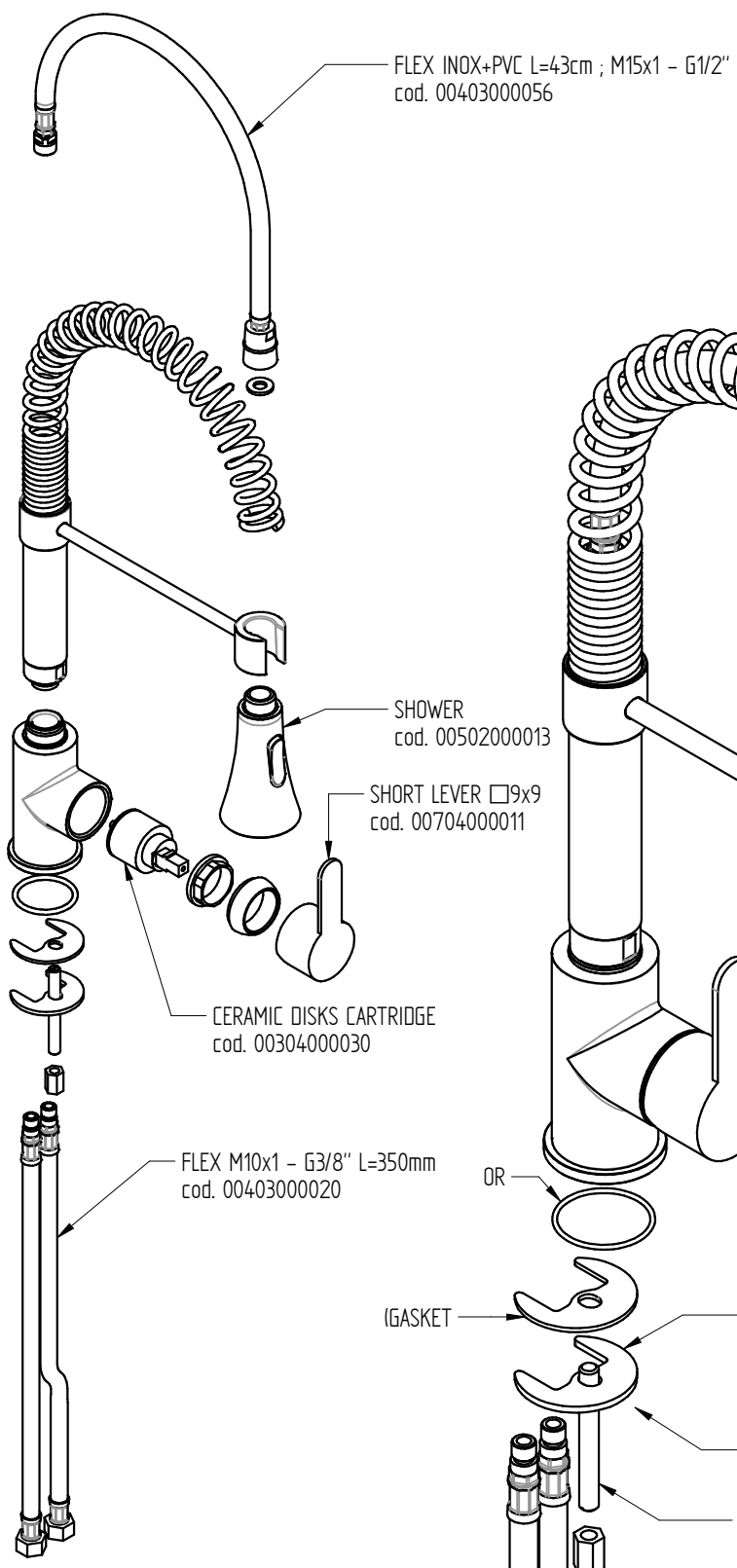

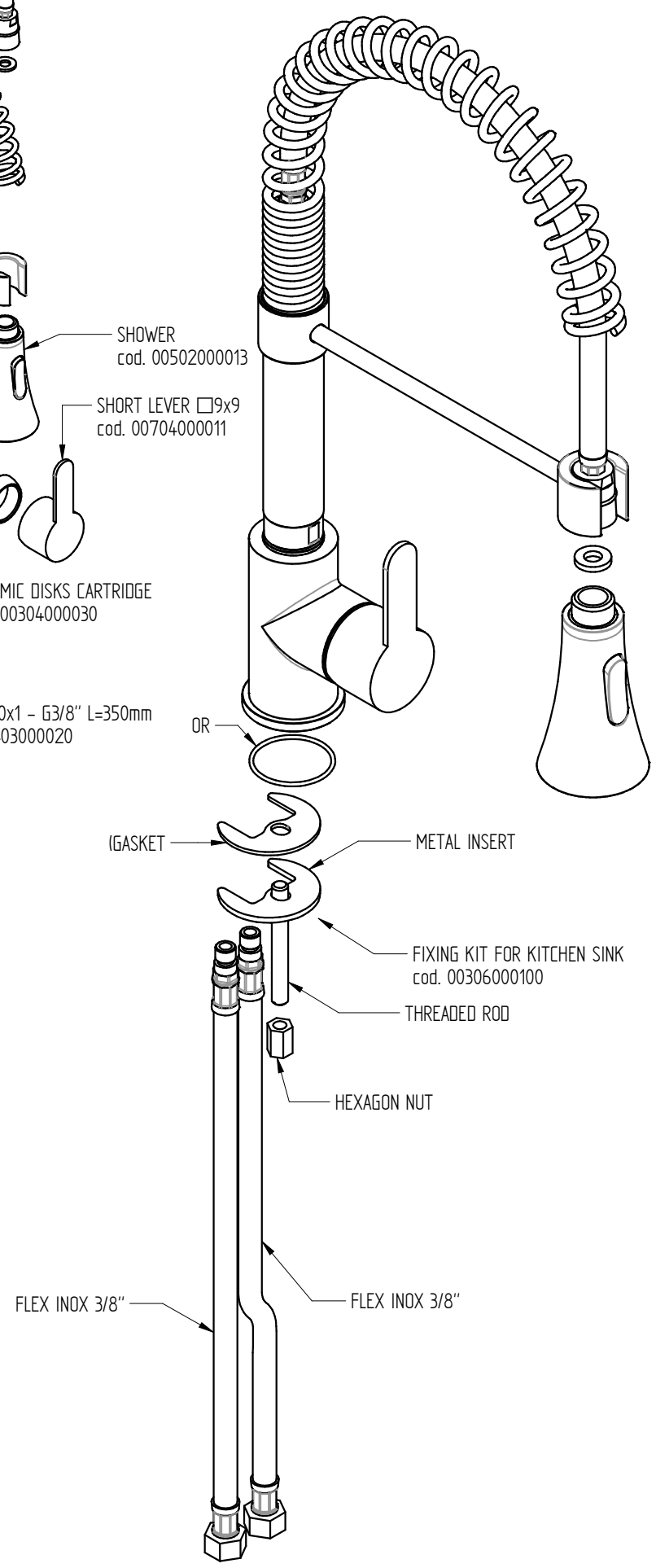

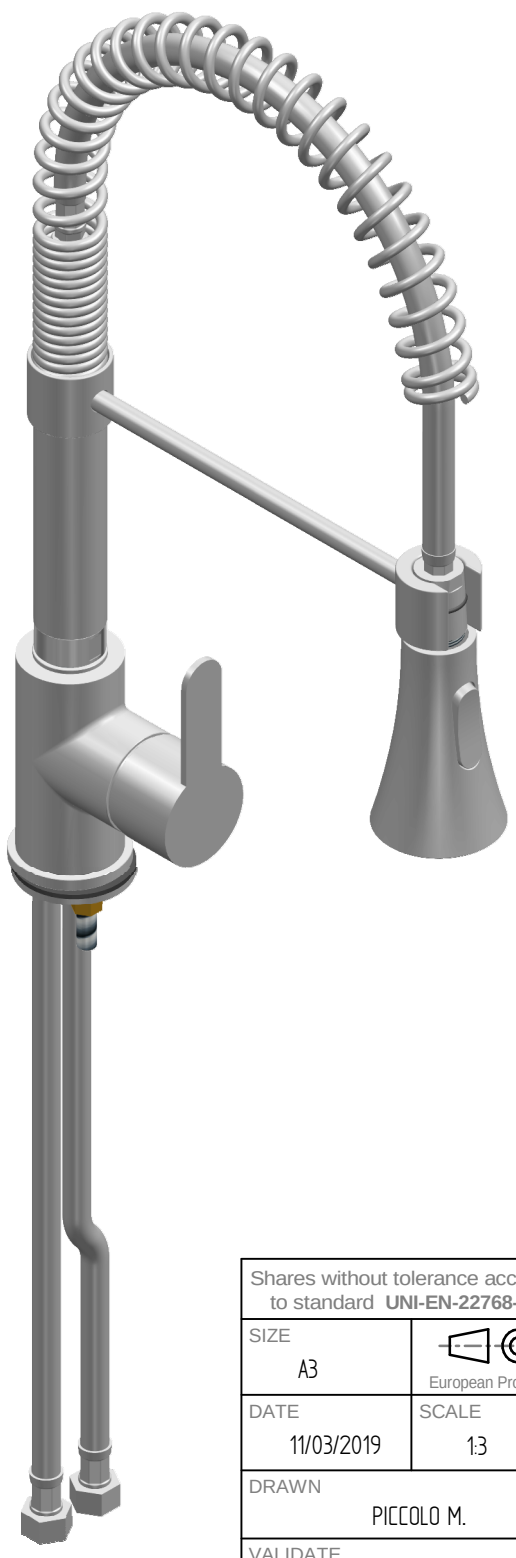

FLOW RATE : 8 L/min at 3,5 BAR with aerated shower jet
11 L/min at 3,5 BAR with spray shower jet

sink fixing hole : ø30 mm

Shares without tolerance according to standard **UNI-EN-22768-1-m**		DESCRIPTION	CODE
SIZE		ONE HOLE MIXER TAP WITH SHOWER	EROS003
A3	European Projection		WEIGHT
DATE	SCALE		3 Kg
11/03/2019	1:3		
DRAWN			
PICCOLO M.			
VALIDATE			
PICCOLO M.			

MONOLITH
DESIGN AND TECHNOLOGICAL RESEARCH FOR WATER

VIA DELL'ARTIGIANO 8/F-8-G , 31050 MONASTIER di TREVISO (TV) tel: 0422 842157 - fax: 0422 708978

DONE WITH DESIGN CAD - PROHIBITED THE CHANGES MANUAL

Rev. 01