TECHNICAL SPECIFICATIONS :

MINIMUM / MAXIMUM OPERATING TEMPERATURE : 5 ÷ 70°C
MINIMUM / MAXIMUM OPERATING PRESSURE : 0,5 ÷ 7 Bar
RECOMMENDED : 3 ÷ 5 Bar

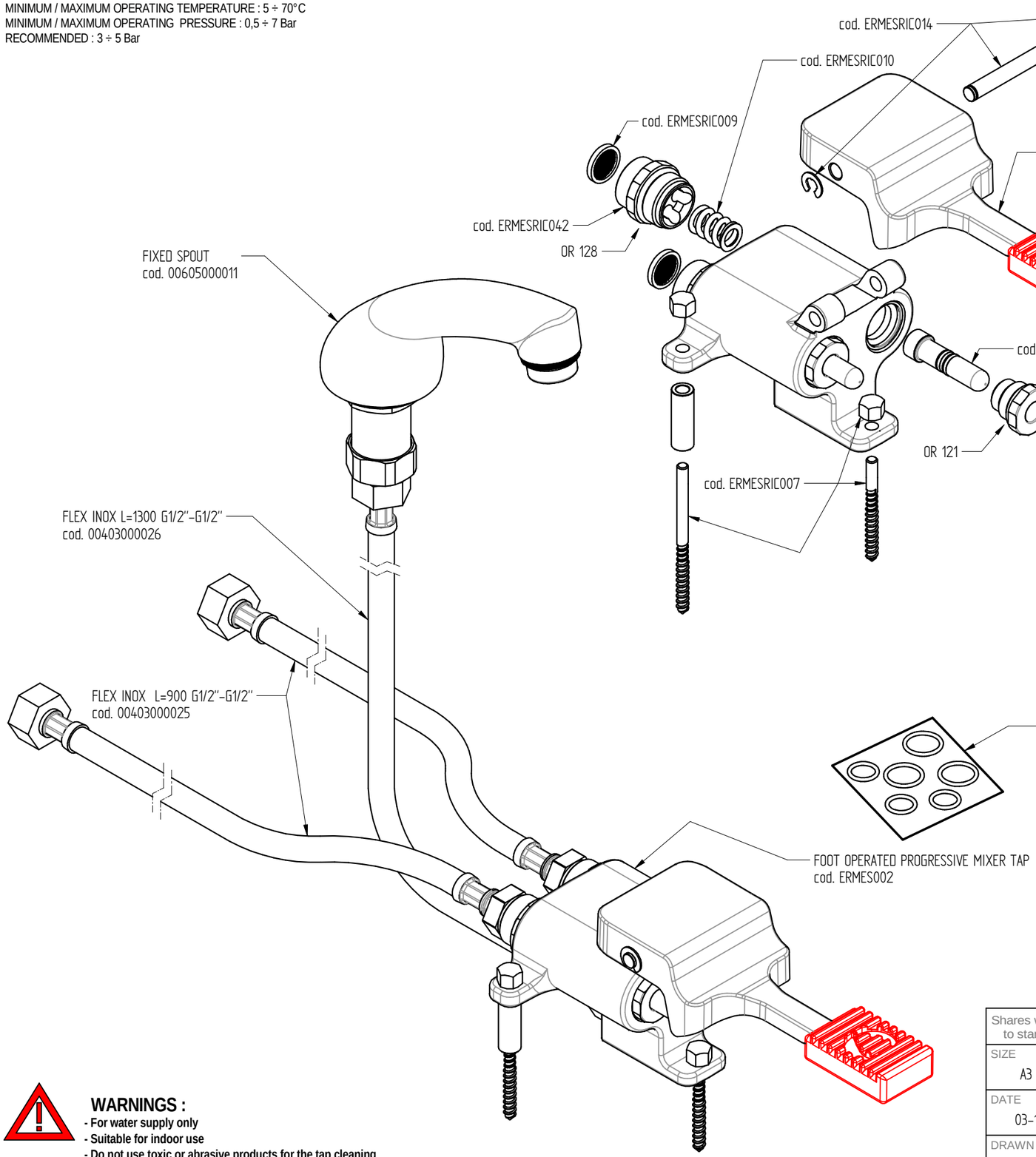

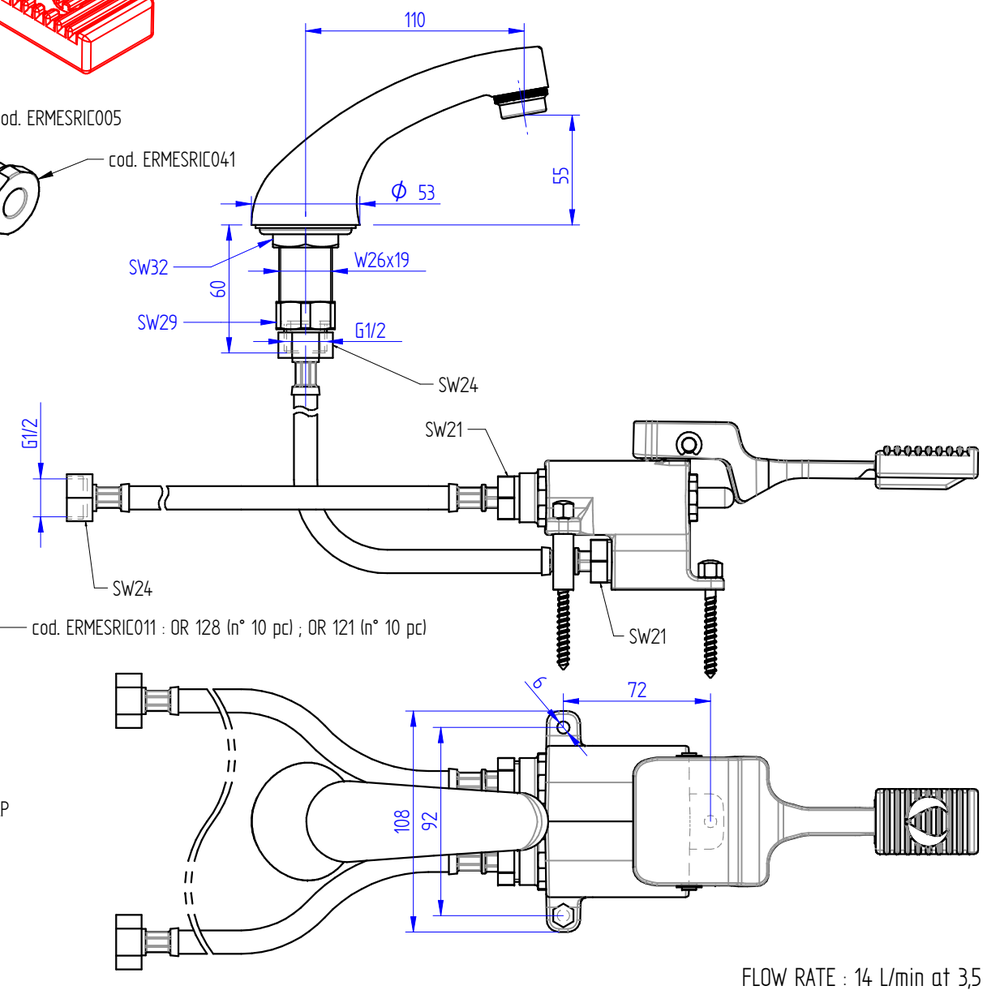

FLOW RATE : 14 L/min at 3,5 BAR

WARNINGS :

- For water supply only
- Suitable for indoor use
- Do not use toxic or abrasive products for the tap cleaning
- Install stop valve with filter (recommended) for maintenence operations
- Install filter gaskets (supplied) in the supply line
- Clean the pipes from debris, by to flow the water, before connecting the tap to the supply line
- Installation for release to specialized personnel

Shares without tolerance according to standard **UNI-EN-22768-1-m**	DESCRIPTION KIT FOOT OPERATED PROGRESSIVE MIXER WITH FIXED SPOUT	CODE ERMES002KIT1
SIZE A3 — European Projection		WEIGHT 2,53 Kg
DATE 03-12-2021 — SCALE 1:3	MONOLITH DESIGN AND TECHNOLOGICAL RESEARCH FOR WATER	
DRAWN PICCOLO M.		
VALIDATE PICCOLO M.	VIA DELL'ARTIGIANO 8/F-8-G , 31050 MONASTIER di TREVISO (TV) tel: 0422 842157 - fax: 0422 708978	

DONE WITH DESIGN CAD - PROHIBITED THE CHANGES MANUAL

Rev. 00