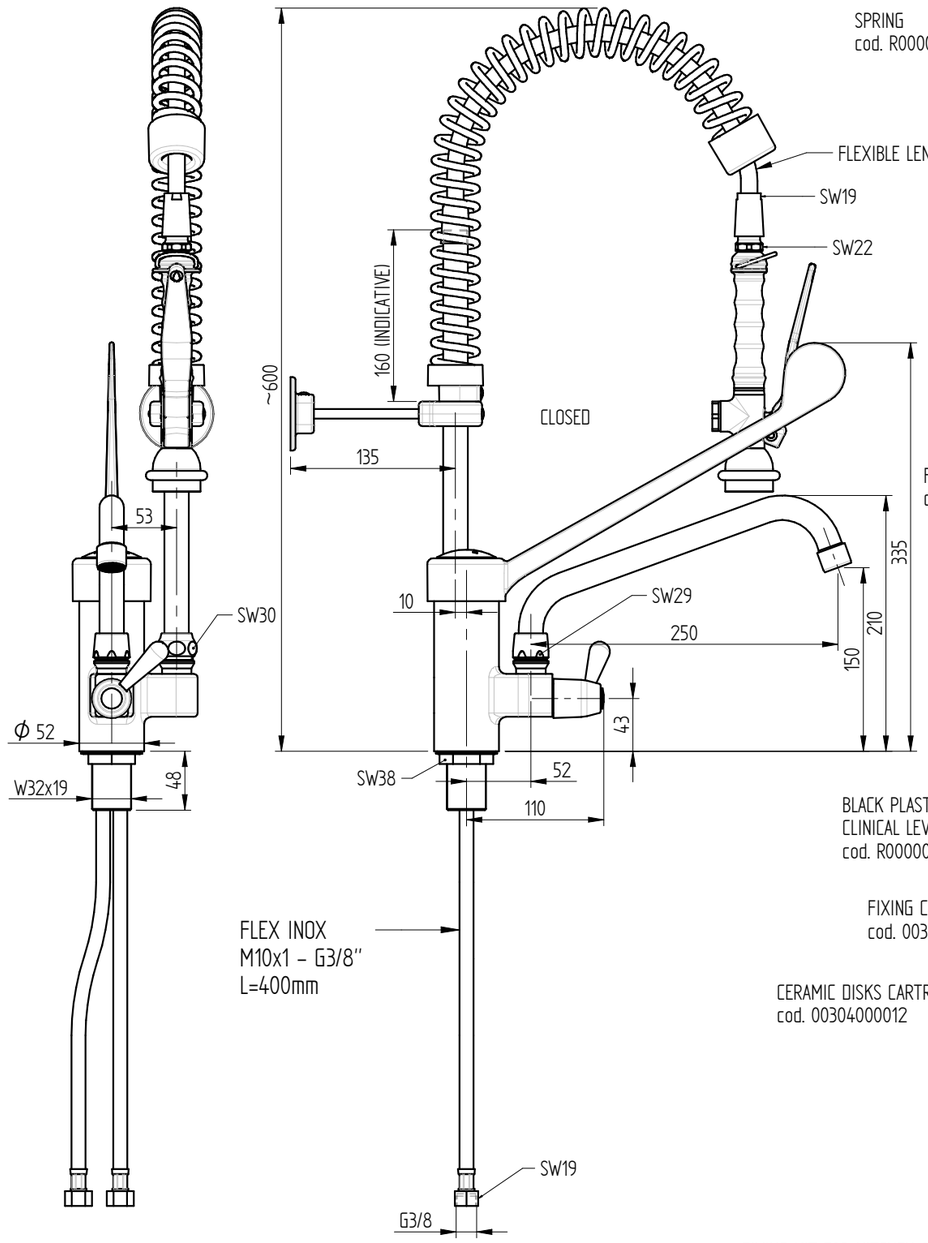


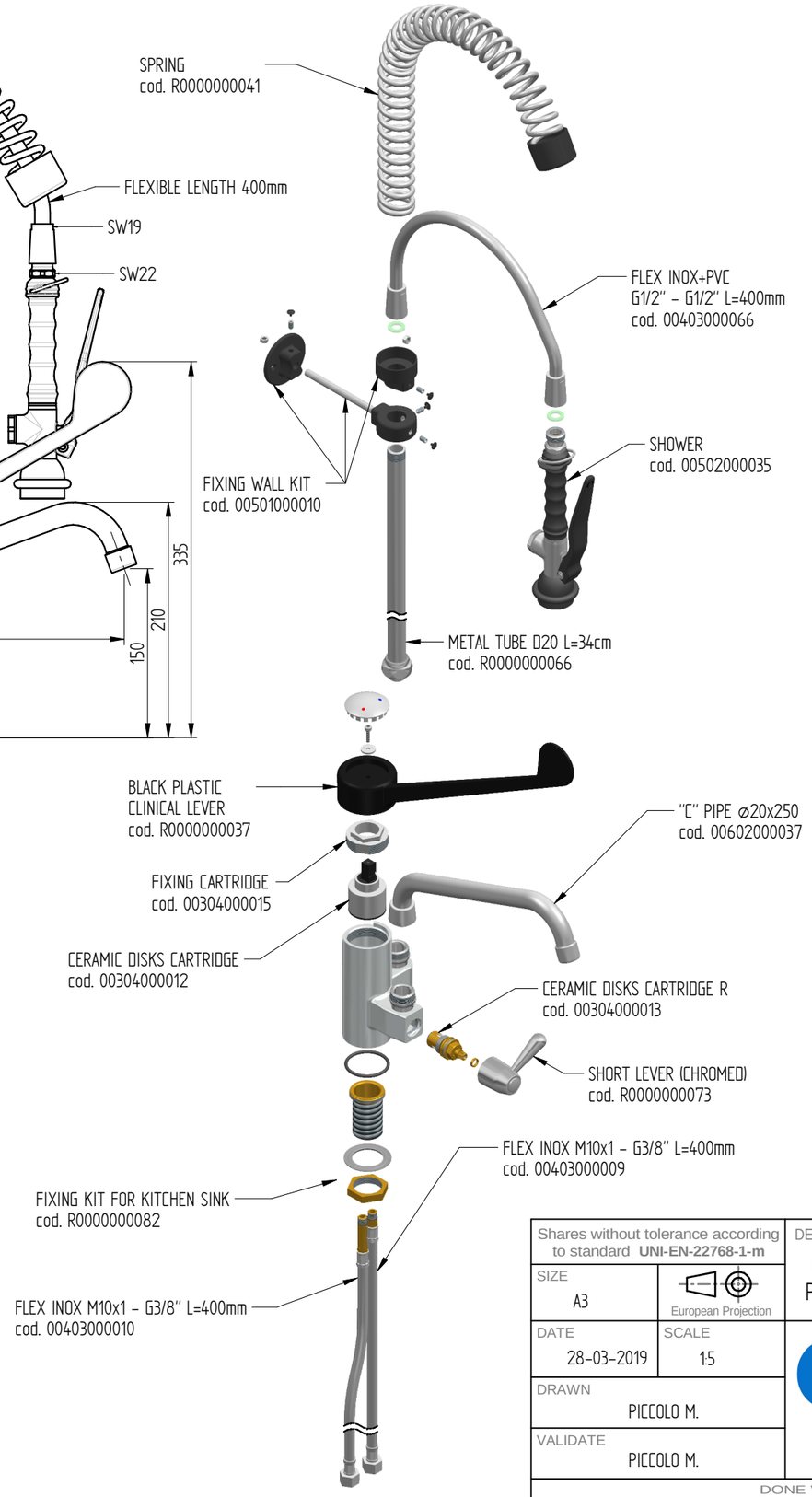


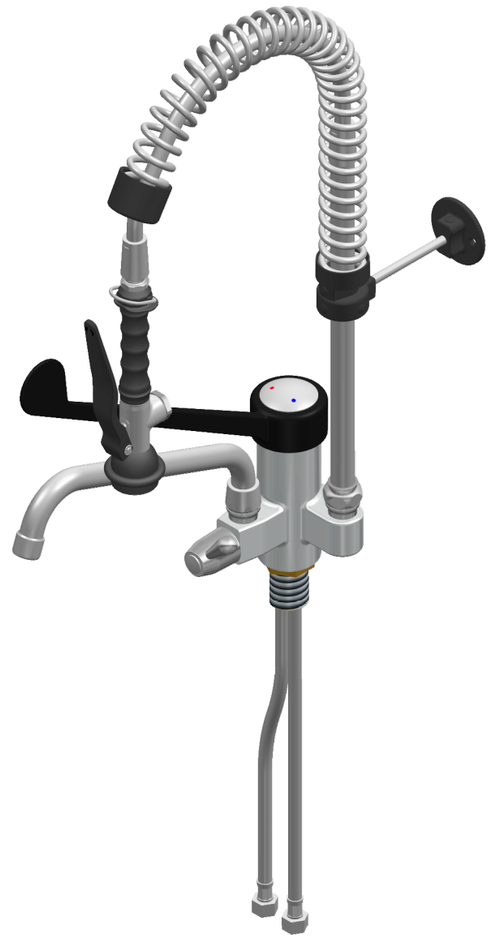

FLOW RATE : 12 L/min at 3,5 BAR only from the shower
14 L/min at 3,5 Bar onlly from the spout
18 L/min at 3,5 BAR when both + spout are open

sink fixing hole : ø32,5 mm

| | | | |
|---|---|---|---|
| Shares without tolerance according to standard **UNI-EN-22768-1-m** | DESCRIPTION<br>ONE HOLE PRE-RINSE UNIT MIXER WITH SWINGING SPOUT AND PLASTIC (PA6) CLINICAL LEVER, MINI VERSION, BASIC SHOWER HAND | | CODE<br>ERAMINI252 |
| SIZE<br>A3 | European Projection | | WEIGHT<br>4,47 Kg |
| DATE<br>28-03-2019 | SCALE<br>1:5 | | |
| DRAWN<br>PICCOLO M. | | | |
| VALIDATE<br>PICCOLO M. | | | |

MONOLITH
DESIGN AND TECHNOLOGICAL RESEARCH FOR WATER

VIA DELL'ARTIGIANO 8/F-8-G , 31050 MONASTIER di TREVISO (TV) tel: 0422 842157 - fax: 0422 708978

DONE WITH DESIGN CAD - PROHIBITED THE CHANGES MANUAL