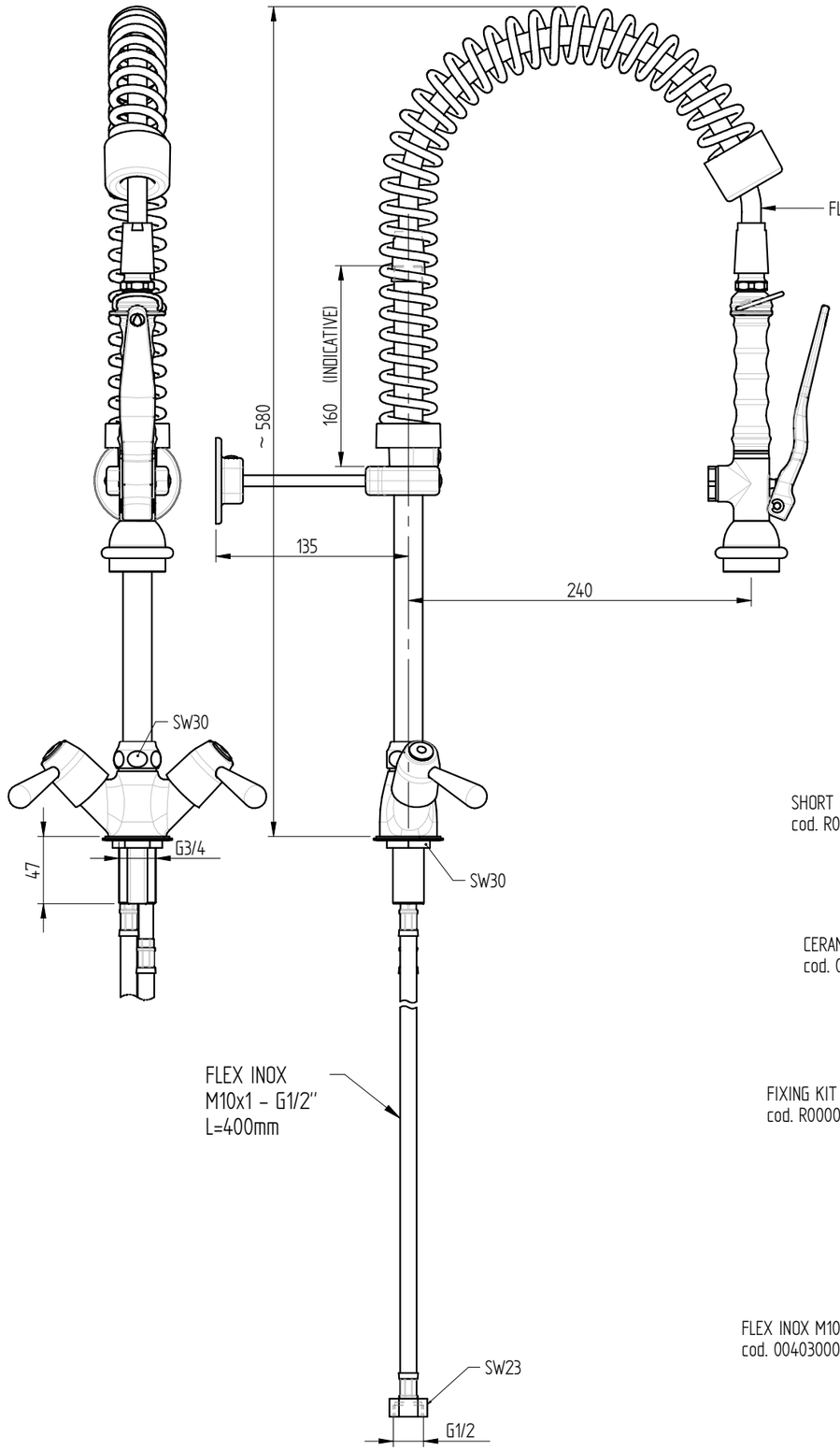

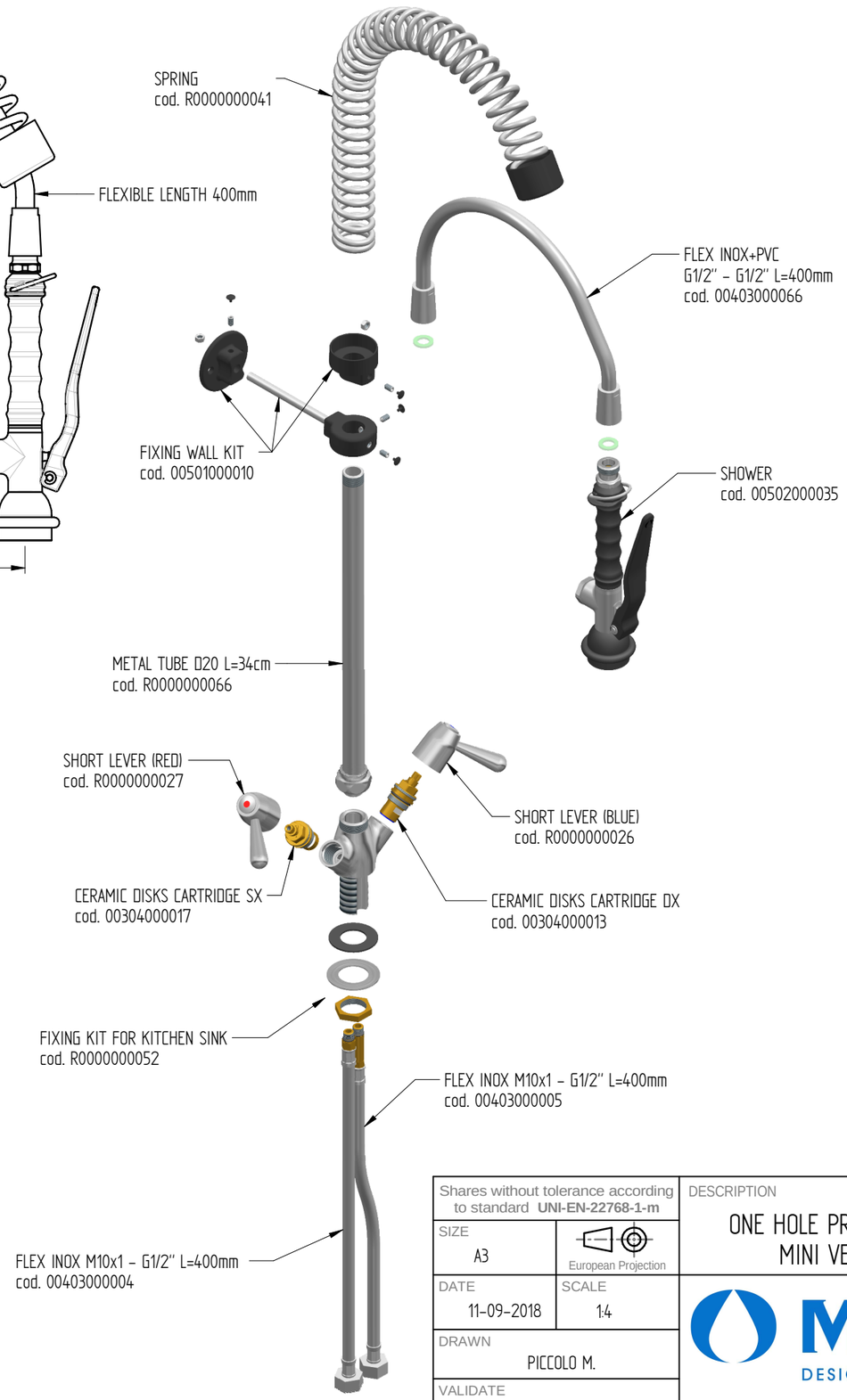

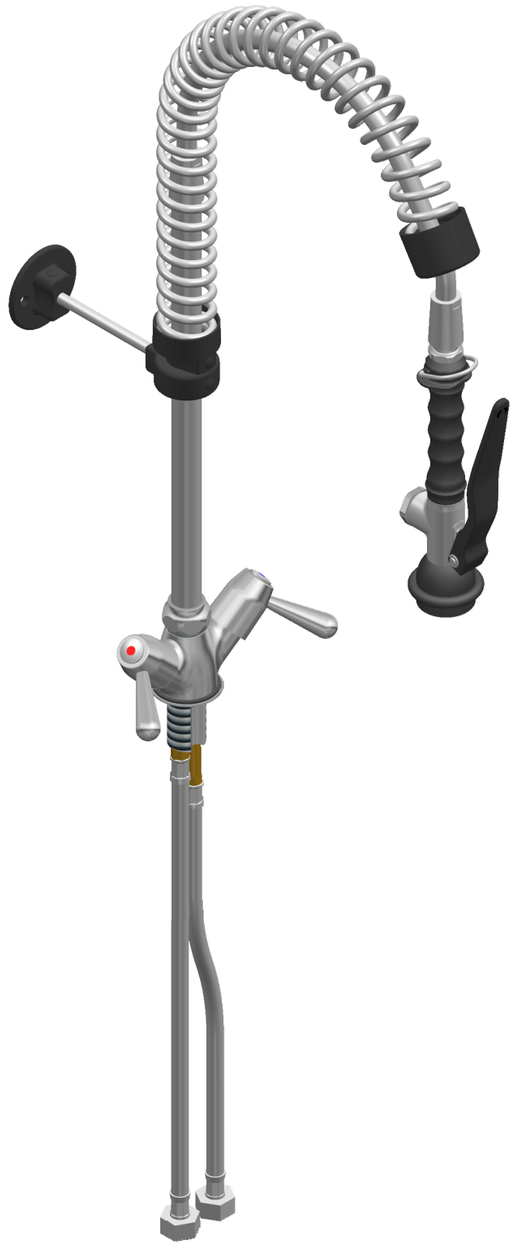

FLOW RATE : 12 L/min at 3,5 BAR only from the shower

sink fixing hole : ø27 mm

Shares without tolerance according to standard **UNI-EN-22768-1-m**	DESCRIPTION	CODE
SIZE: A3 — European Projection	ONE HOLE PRE-RINSE UNIT WITH LEVER HANDLE, MINI VERSION, BASIC SHOWER HAND	ERAMINI141
		WEIGHT: 3,08 Kg
DATE: 11-09-2018 — SCALE: 1:4	MONOLITH — DESIGN AND TECHNOLOGICAL RESEARCH FOR WATER	
DRAWN: PICCOLO M.		
VALIDATE: PICCOLO M.	VIA DELL'ARTIGIANO 8/F-8-G , 31050 MONASTIER di TREVISO (TV) tel: 0422 842157 - fax: 0422 708978	

DONE WITH DESIGN CAD - PROHIBITED THE CHANGES MANUAL

Rev. 01 - 09/02/2022