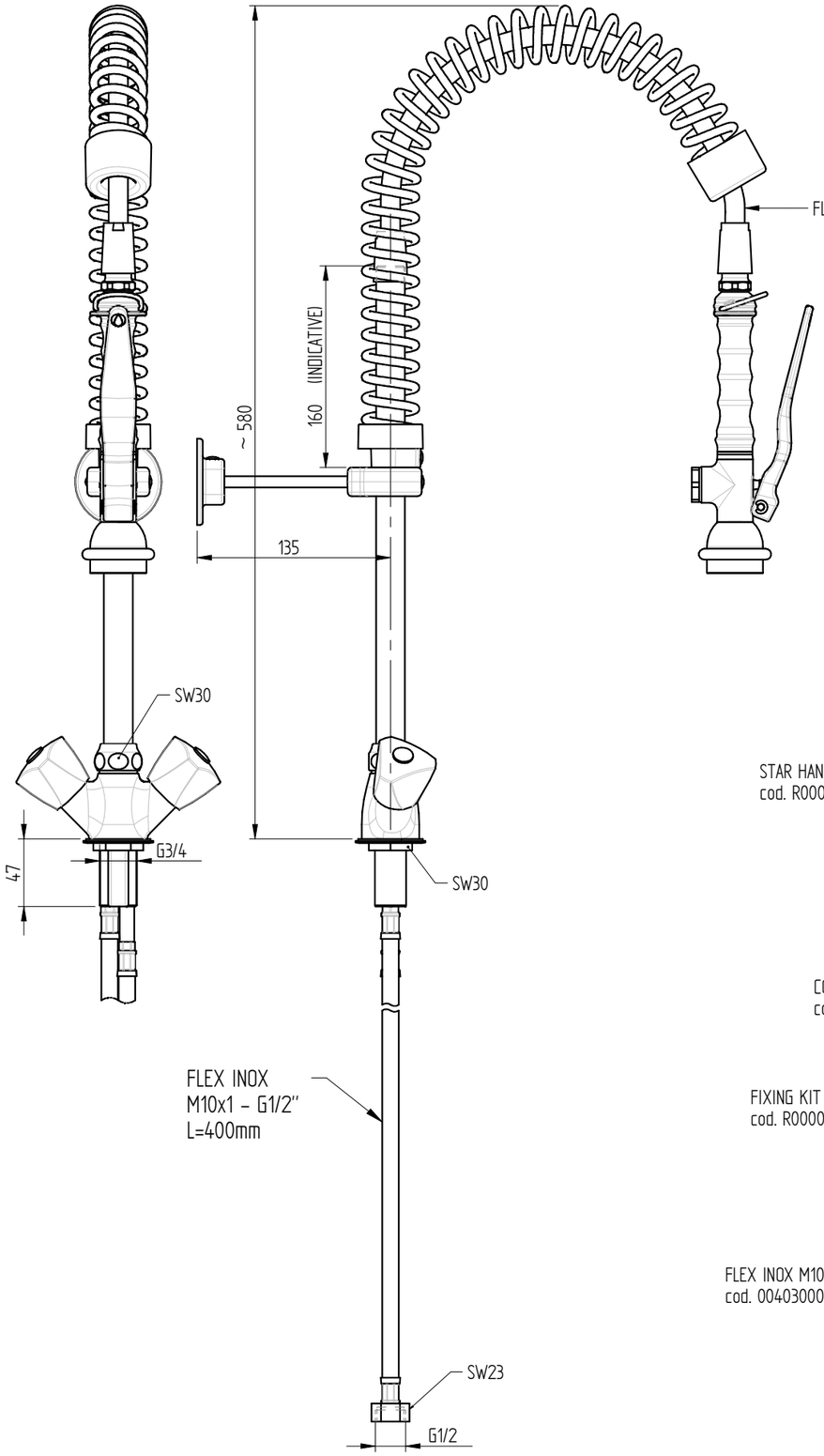

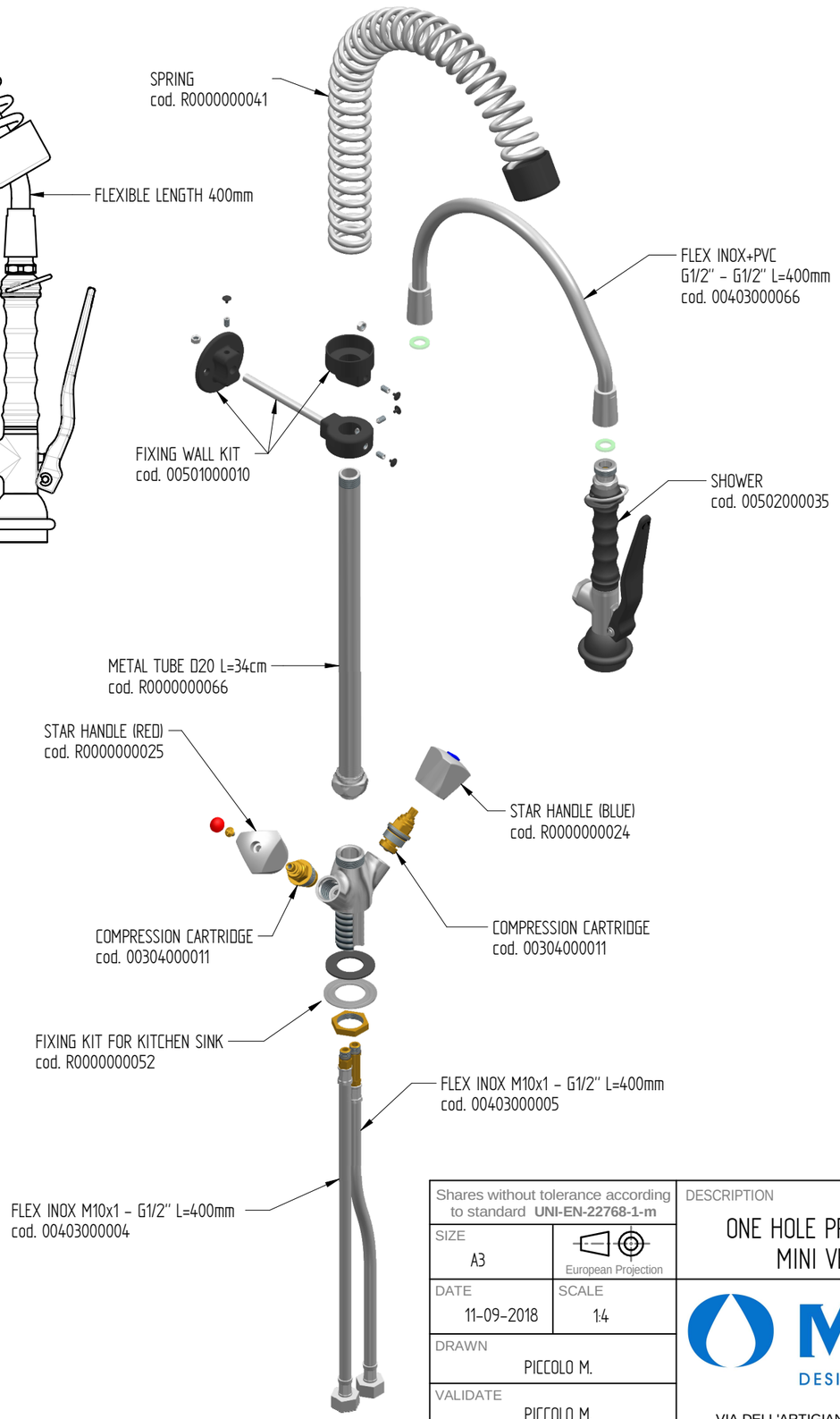

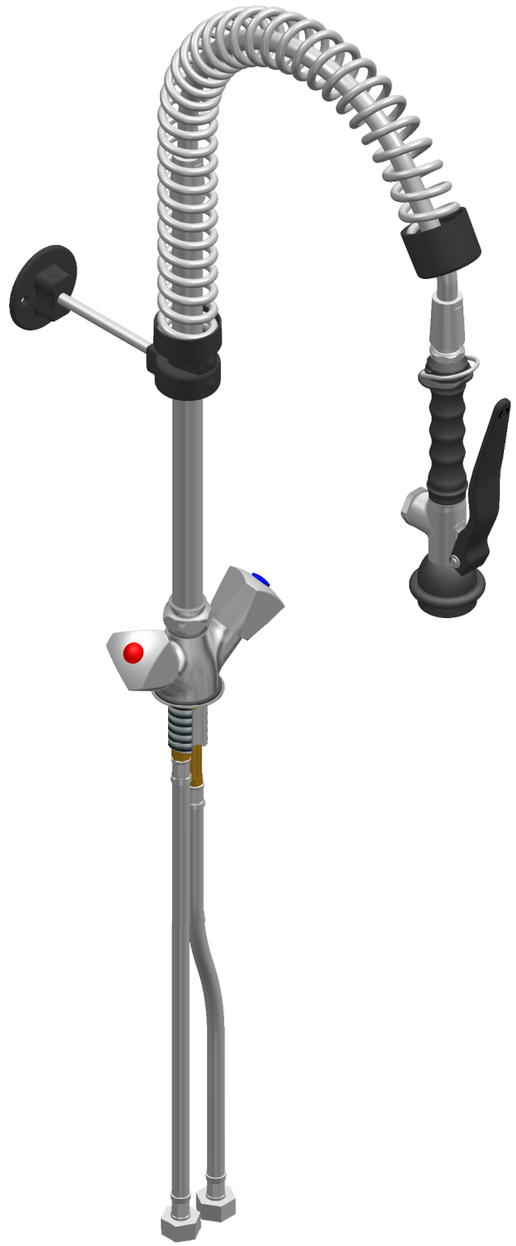

FLOW RATE : 12 L/min at 3,5 BAR only from the shower

sink fixing hole : ø27 mm

Shares without tolerance according to standard **UNI-EN-22768-1-m**	DESCRIPTION	CODE
SIZE A3 — European Projection	ONE HOLE PRE-RINSE UNIT WITH STAR HANDLE, MINI VERSION, BASIC SHOWER HAND	ERAMINI139
		WEIGHT 3,11 Kg
DATE 11-09-2018	SCALE 1:4	
DRAWN PICCOLO M.		
VALIDATE PICCOLO M.		

MONOLITH
DESIGN AND TECHNOLOGICAL RESEARCH FOR WATER

VIA DELL'ARTIGIANO 8/F-8-G , 31050 MONASTIER di TREVISO (TV) tel: 0422 842157 - fax: 0422 708978

DONE WITH DESIGN CAD - PROHIBITED THE CHANGES MANUAL

Rev. 01 - 07-02-2022