rev.	CHANGE DESCRIPTION	DATE	DRAWN	VALIDATE
00	---	.	PICCOLO M.	PICCOLO M.

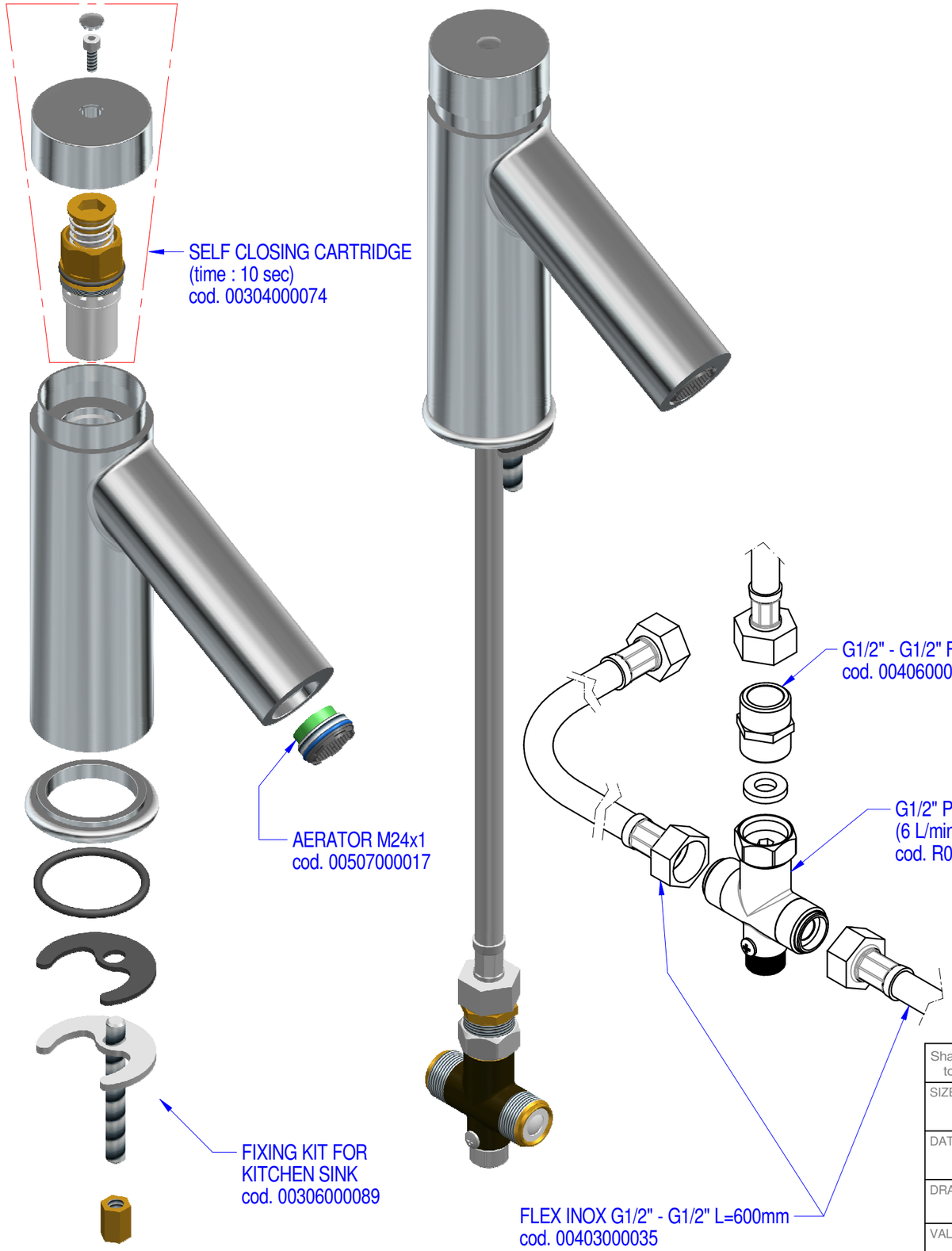

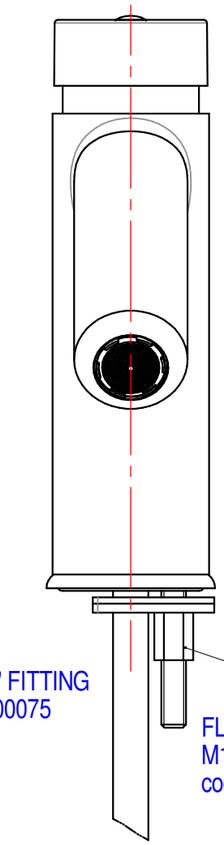

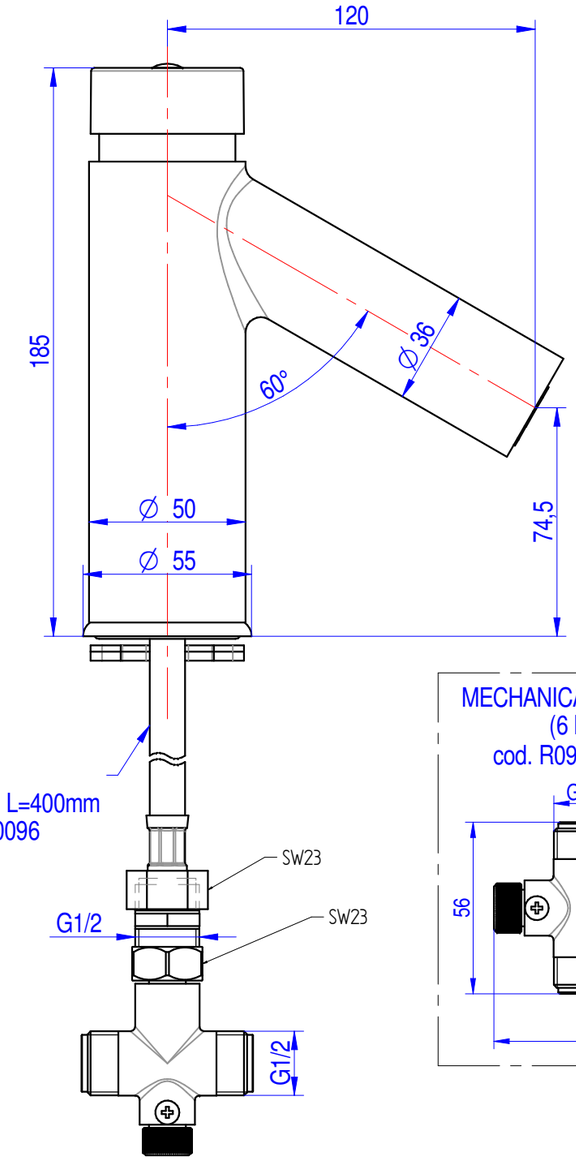

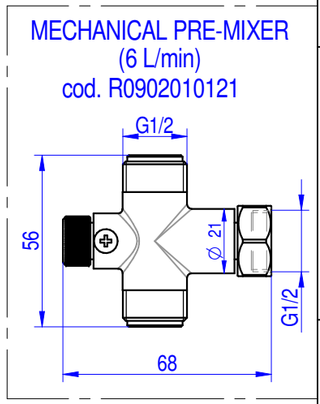

sink fixing hole : ø33 mm

Shares without tolerance according to standard **UNI-EN-22768-1-m**	DESCRIPTION BASIN SELF CLOSING TAP PREMIUM LINE WITH MECHANICAL PRE-MIXER	CODE ARES001P/PM
SIZE A3 — European Projection		WEIGHT 1,91 Kg
DATE 29-10-2018 — SCALE 1:2	MONOLITH DESIGN AND TECHNOLOGICAL RESEARCH FOR WATER	
DRAWN PICCOLO M.		
VALIDATE PICCOLO M.	VIA DELL'ARTIGIANO 8/F-8-G , 31050 MONASTIER di TREVISO (TV) tel: 0422 842157 - fax: 0422 708978	

DONE WITH DESIGN CAD - PROHIBITED THE CHANGES MANUAL